# Linear guides

## Overview


Slides functional overview
General notes

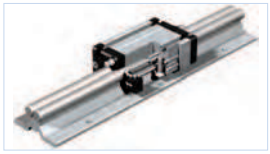

2-20

LFS-8-1 Linear guide rails
LFS-8-2

2-22

with LW 6 trolley
with WS1 aluminium slide

LFS-8-3 Linear guide rails

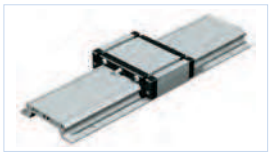

2-24

with LW 7 trolley
with WS3 aluminium slide

LFS-8-4 Linear guide rails

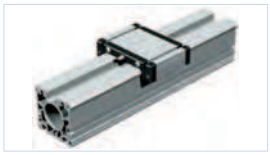

2-26

with LW 7 trolley
with WS3 aluminium slide

LFS-12-1 Linear guide rails

2-28

with LW 3 trolley
with WS4 aluminium slide
with LS1 steel slides

LFS-12-11 Linear guide rails

2-30

with LW 5 trolley
with WS6 aluminium slide

LFS-12-2 Linear guide rails

2-32

with LW 3 trolley
with WS4 aluminium slide


CAD data on our website **www.isel-germany.de**

# Linear guides

## Overview


LFS-12-3 Linear guide rails

2-34

with LW 2 trolley
with LW 8 trolley
with WS7 aluminium slide

LFS-12-10 Linear guide rails

2-36

with LW 4 trolley
with WS8 aluminium slide
with dual track set 1 + 2

LFS-16-120 Linear guide rail

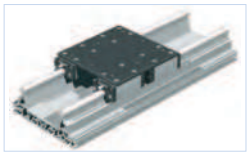

2-38

with 2 or 4 IWS 1 aluminium slide
with 2 or 4 ILS 1 steel slides

Accessories 2-40

Operating loads calculation 2-41


CAD data on our website **www.isel-germany.de**

# Linear guide slide function

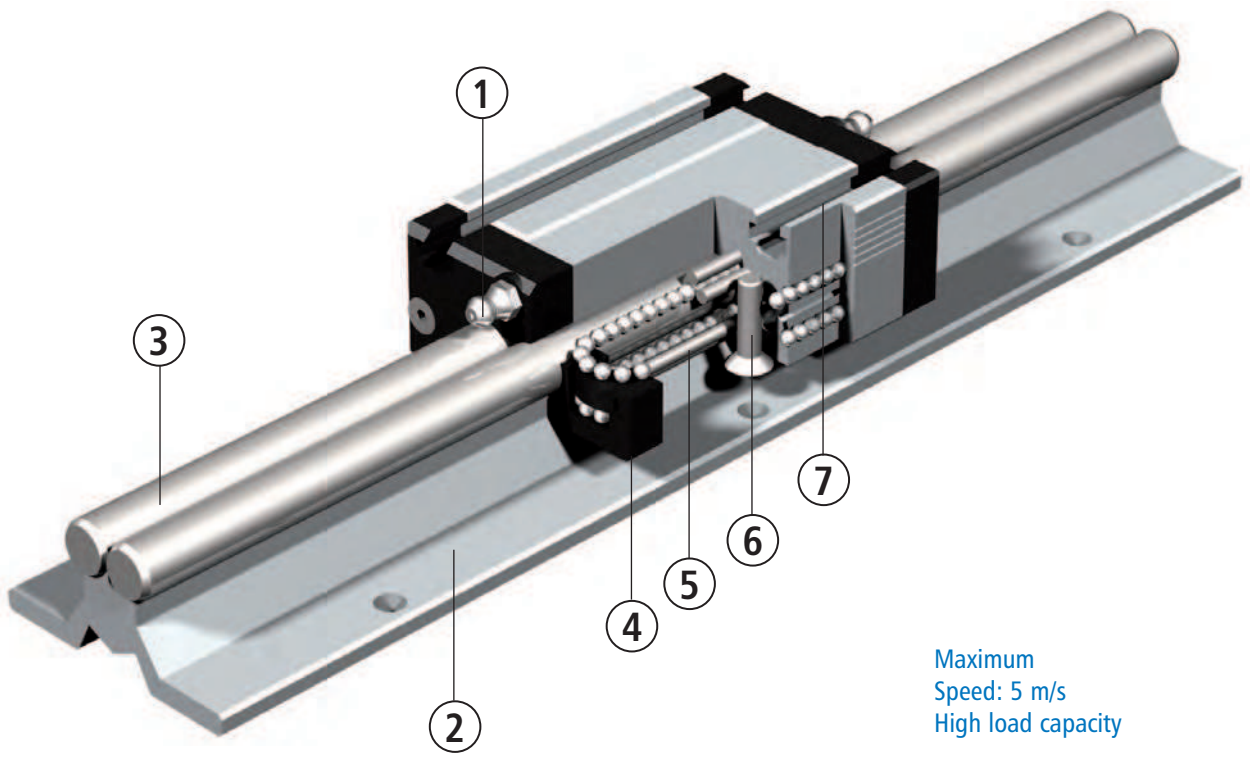


Maximum
Speed: 5 m/s
High load capacity

## Aluminium shaft slides

The patented shaft slides are perfectly suited for assembling of complex multiple axis systems for handling and machining.

The wide range of models covers a multitude of applications.

All models can be produced to order with various profile lengths (70, 100, 150 and 200 mm).

1. Lubrication options to both sides for the recirculating balls.

2. The basic supports for all linear guides are extruded aluminium profiles compliant with DIN EN 12020-2, which are provided with T-slot inserts for fastening in the body of the profile or with drilled hole fixing points.

3. Precision steel shafts with a hardness of 60 ± 2 HRC are used as guide rails. All LFS-8 versions are optionally available with stainless steel shafts.

4. The recirculating ball steering systems are glass fibre reinforced.

5. There are patented recirculating balls in the linear slide. Ball bearings run in each case between two ground steel pins and the guidance shaft.

6. The slide is adjusted with self-lokking setting screws. This is how the rows of balls and shafts or pins are used with each other and thus prestressed. The slide are preset in the factory to the correct stress. All shaft slides are optionally available in a stainless version.

7. To secure transport loads, slot plates, etc., the shaft slide are provided with T-slot inserts or fixing borings.

# General notes

## Load capacity and working life

### Installation site

In principal, the installation site for linear guides can be chosen anywhere. You merely have to consider whether all the forces and moments arising are below the maximum values for the relevant axes.

### Temperatures

All linear guides are designed for continuous operation at ambient temperatures of up to 60 °C. In short-term operation, maximum temperatures of 80 °C are permissible.

Linear guides are unsuitable for temperatures below freezing.

### Straightness/Warping

The aluminium profiles used are extruded profiles, which exhibit divergences regarding straightness and may be warped, owing to the manufacturing process.
The tolerance of this deviation is set out in DIN EN 12020-2.
In the worst case, the linear guide deviations equal these limits, but typically they are lower.

In order to achieve the desired guidance accuracy, the guide must be aligned using shims or clamped to a bearing service machined to the corresponding accuracy. This achieves tolerances of at least 0.1 mm/1000 mm.

### Principles Load capacity and working life

The dimensioning of a linear guide is based on the load capacity of the individual elements. The load capacity is described by:

- the dynamic load factor C
- the static load factor C0
- the static torques M0X, M0Y and M0Z

The basis of the dynamic load factors according to DIN is a nominal working life of 100,000 m displacement path. Far East suppliers often quote load factors for a nominal working life of 50,000 m displacement path; this produces load factor figures which are approximately 20% higher than those according to DIN.

### Dynamic load capacity

The fatigue characteristics of the material determine the dynamic load capacity. The working life - the fatigue period - also depends on:

- the stress on the linear guide
- the speed at which the linear guide moves
- the statistical randomness of the first damage occurring

### Useful life

Useful life means the working life actually achieved by a linear guide.
The useful life may differ from the computed working life.

The following can lead to premature failure through wear or fatigue:

- Misalignments between guide rails or guidance elements
- Contamination of the guide rails
- Insufficient lubrication
- Oscillating motion with very small lifts (formation of grooves)
- Vibrations at rest (formation of grooves)

Owing to the multiplicity of installation and operating relationships, it is impossible to determine the useful life of a linear guide exactly in advance. The safest way to make an accurate estimate of the useful life is, as before, a comparison with similar installations.

mechanics

# Linear guide rails

# LFS-8-1
# LFS-8-2

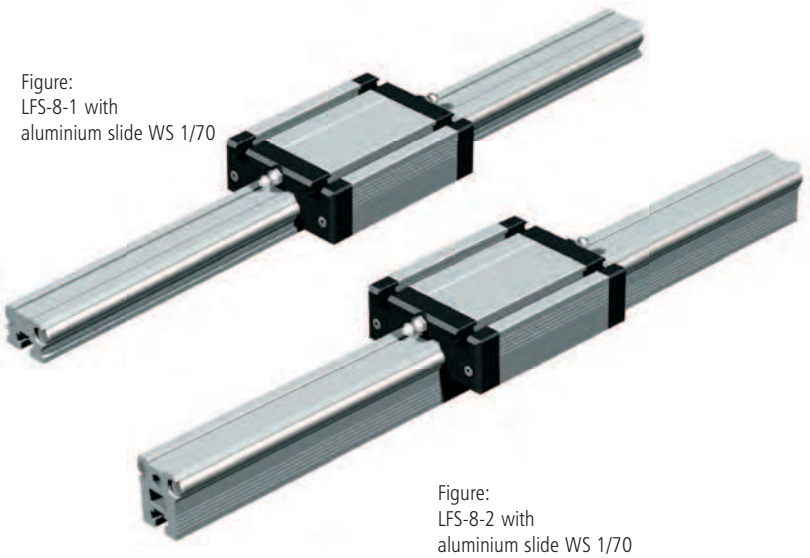

Figure:
LFS-8-1 with
aluminium slide WS 1/70

Figure:
LFS-8-2 with
aluminium slide WS 1/70

## Features

- W 30 x H 20 mm (LFS-8-1)
  W 30 x H 32.5 mm (LFS-8-2)
- 2 precision steel shafts Ø 8
- Anti-twist lock
- Aluminium shaft housing profile, naturally anodised
- Fixing from below with M6 tapped rails in the T-key insert
- Conditionally self-supporting
- Special lengths to order
- Weights: approx. 1.6 kg/m (LFS-8-1)
  approx. 2.0 kg/m (LFS-8-2)

Options:

- Stainless steel version
- Drilled for M6 (LFS-8-1 only)

## Ordering key

**235 00X XXXX**

LFS-8-1/standard = **0**
LFS-8-1/stainless = **1**
LFS-8-2/standard = **2**
LFS-8-2/stainless = **3**

Length in mm (in 100 mm raster)
e.g. **0029** = Length 298
**0299** = Length 2998

Steel shaft length: total length L - 3 mm

Profile up to 6000 mm available without impact connection, steel shafts divided.

## Load data

| Shaft slide WS 1/70 | |
|---|---|
| $C_o$ | 3114 N |
| C | 1846 N |
| $F_1$ static | 2659 N |
| $F_1$ dynamic | 1576 N |
| $F_2$ static | 3114 N |
| $F_2$ dynamic | 1846 N |
| $M_x$ static | 37.3 Nm |
| $M_y$ static | 100.5 Nm |
| $M_z$ static | 117.6 Nm |
| $M_x$ dynamic | 22.1 Nm |
| $M_y$ dynamic | 59.5 Nm |
| $M_z$ dynamic | 69.7 Nm |

| Shaft slide WS 1 | |
|---|---|
| $C_o$ | 4590 N |
| C | 2390 N |
| $F_1$ static | 3920 N |
| $F_1$ dynamic | 2041 N |
| $F_2$ static | 4590 N |
| $F_2$ dynamic | 2390 N |
| $M_x$ static | 55.0 Nm |
| $M_y$ static | 148.1 Nm |
| $M_z$ static | 173.4 Nm |
| $M_x$ dynamic | 28.6 Nm |
| $M_y$ dynamic | 77.1 Nm |
| $M_z$ dynamic | 90.2 Nm |

| Trolley LW 6 | |
|---|---|
| $C_o$ | 2160 N |
| C | 4000 N |
| $F_1$ static | 4320 N |
| $F_1$ dynamic | 3792 N |
| $F_2$ static | 2160 N |
| $F_2$ dynamic | 4000 N |
| $M_x$ static | 121.1 Nm |
| $M_y$ static | 194.4 Nm |
| $M_z$ static | 97.2 Nm |
| $M_x$ dynamic | 106.3 Nm |
| $M_y$ dynamic | 170.6 Nm |
| $M_z$ dynamic | 180.0 Nm |

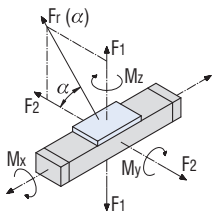


$$Fr(\alpha) = \frac{F2}{\cos \alpha}$$

$$Fr(\alpha) = \frac{F1}{\sin \alpha}$$

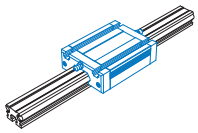

### Aluminium slide

- With recirculating ball guide
- Clamping surface plane milled
- M6 T-key inserts
- Central lubrication option
- Adjustable for no play
- Option: stainless steel version

L 96 × W 72 × H 28.5 mm (WS 1/70)
(weight: approx. 0.4 kg)
Part no.: **223100 0070**
Stainless steel: **223101 0070**

L 126 × W 72 × H 28.5 mm (WS 1)
(weight: approx. 0.5 kg)
Part no.: **223100**
Stainless steel: **223101**

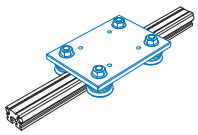

### Trolley LW 6

- L 125 x W 90 x H 7.7 mm
- ground steel plate
- 4 rollers Ø 31, sealed for life
- adjustable for no play
- weight: approx. 1 kg

Part no.: **223011**

# Linear guide rails

# LFS-8-1
# LFS-8-2



## Bending

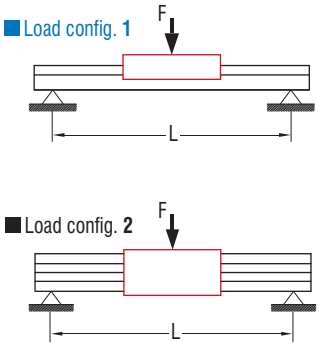


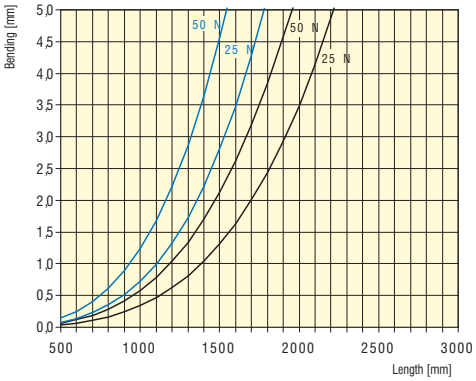


LFS-8-1

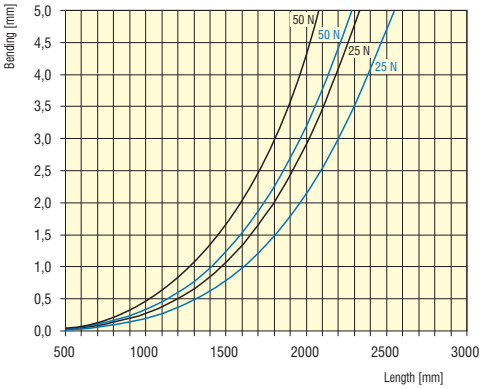


LFS-8-2

## Dimensioned drawings

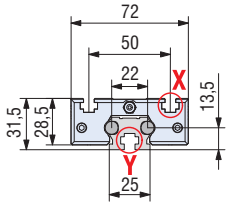


LFS-8-1

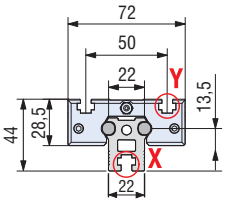


LFS-8-2

**LFS-8-1** or **LFS-8-2** with aluminium slide **WS 1/70** or **WS 1**

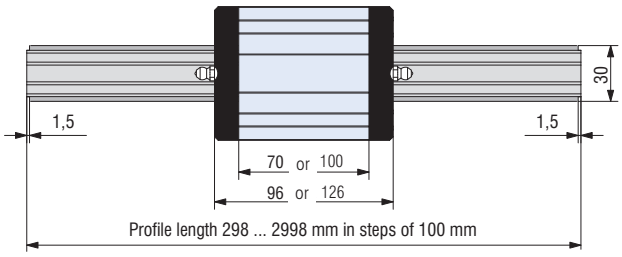


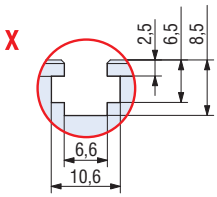


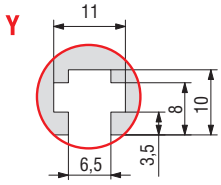


**LFS-8-1** or **LFS-8-2** with trolley **LW 6**

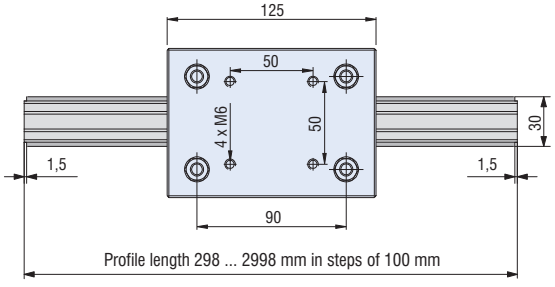


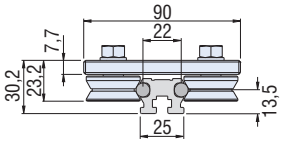


LFS-8-1

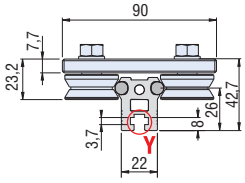


LFS-8-2

# Linear guide rails

# LFS-8-3

## Features

- W 115 x H 25.5 mm
- 2 precision steel shafts Ø 8
- Particularly resistant to twisting
- Aluminium shaft housing profile, naturally anodised
- Fixing from above through M6 drillings in the raster 100 mm
- Conditionally self-supporting
- Special lengths to order
- Weight: approx. 3.2 kg/m
- Option: stainless steel version

## Ordering key

**235 00X XXXX**

Standard = **4**
Stainless = **5**

Length in mm (in 100 mm raster)
e.g. **0029** = Length 296
**0299** = Length 2996

Length overall L -1 mm

Profile up to 6000 mm available without impact connection, steel shafts divided.

## Load data

| Shaft slide WS 3/70 | |
|---|---|
| $C_o$ | 3141 N |
| C | 1879 N |
| $F_1$ static | 2682 N |
| $F_1$ dynamic | 1604 N |
| $F_2$ static | 3141 N |
| $F_2$ dynamic | 1879 N |
| $M_x$ static | 115.7 Nm |
| $M_y$ static | 105.3 Nm |
| $M_z$ static | 123.3 Nm |
| $M_x$ dynamic | 69.2 Nm |
| $M_y$ dynamic | 62.9 Nm |
| $M_z$ dynamic | 73.7 Nm |

| Shaft slide WS 3 | |
|---|---|
| $C_o$ | 6945 N |
| C | 3190 N |
| $F_1$ static | 5931 N |
| $F_1$ dynamic | 2724 N |
| $F_2$ static | 6945 N |
| $F_2$ dynamic | 3190 N |
| $M_x$ static | 255.9 Nm |
| $M_y$ static | 232.8 Nm |
| $M_z$ static | 272.5 Nm |
| $M_x$ dynamic | 117.5 Nm |
| $M_y$ dynamic | 106.9 Nm |
| $M_z$ dynamic | 125.1 Nm |

| Trolley LW 7 | |
|---|---|
| $C_o$ | 2160 N |
| C | 4000 N |
| $F_1$ static | 4320 N |
| $F_1$ dynamic | 3792 N |
| $F_2$ static | 2160 N |
| $F_2$ dynamic | 4000 N |
| $M_x$ static | 246.8 Nm |
| $M_y$ static | 302.4 Nm |
| $M_z$ static | 151.2 Nm |
| $M_x$ dynamic | 216.7 Nm |
| $M_y$ dynamic | 265.4 Nm |
| $M_z$ dynamic | 280 Nm |

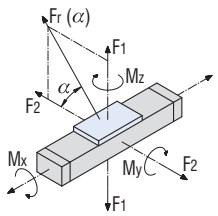


$$Fr(\alpha) = \frac{F2}{\cos \alpha}$$

$$Fr(\alpha) = \frac{F1}{\sin \alpha}$$

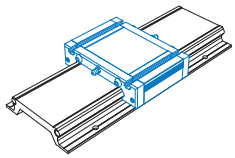

### Aluminium slide

- With recirculating ball guide
- Clamping surface plane milled
- M6 T-key inserts
- Central lubrication option
- Adjustable for no play
- Option: stainless steel version

L 96 x W 130 x H 32 mm (WS 3/70)
(weight: approx. 0.5 kg)
Part no.: **223103 0070**
Stainless steel: **223103 1070**

L 176 x W 130 x H 32 mm (WS 3)
(weight: approx. 0.9 kg)
Part no.: **223103**
Stainless steel: **223103 1000**

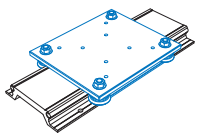

### Trolley LW 7

- L 175 x W 150 x H 7.5 mm
- ground steel plate
- 4 rollers Ø 31, sealed for life
- adjustable for no play
- weight: approx. 2 kg

Part no.: **223012**

# Linear guide rails LFS-8-3



## Bending

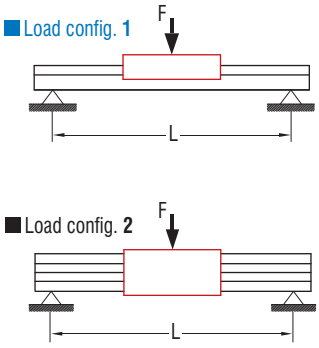


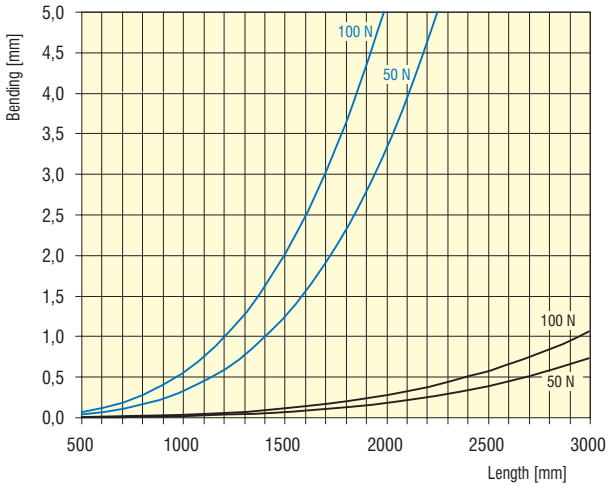


## Dimensioned drawings

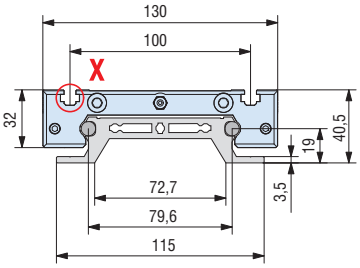


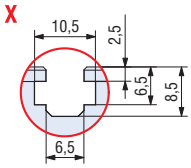


**LFS-8-3** with aluminium slide **WS 3/70 or WS 3**

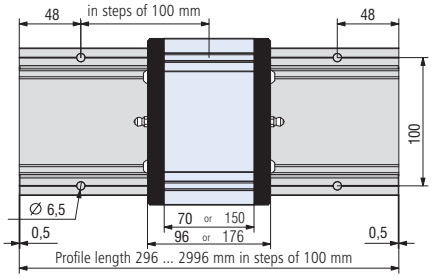


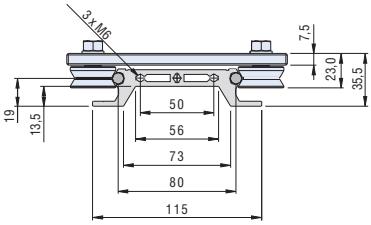


**LFS-8-3** with trolley **LW7**

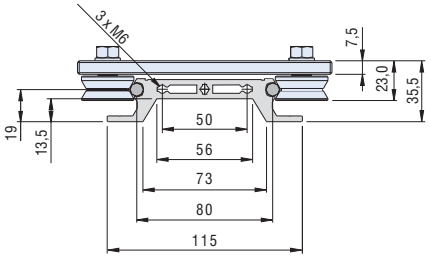

# Linear guide rails

# LFS-8-4

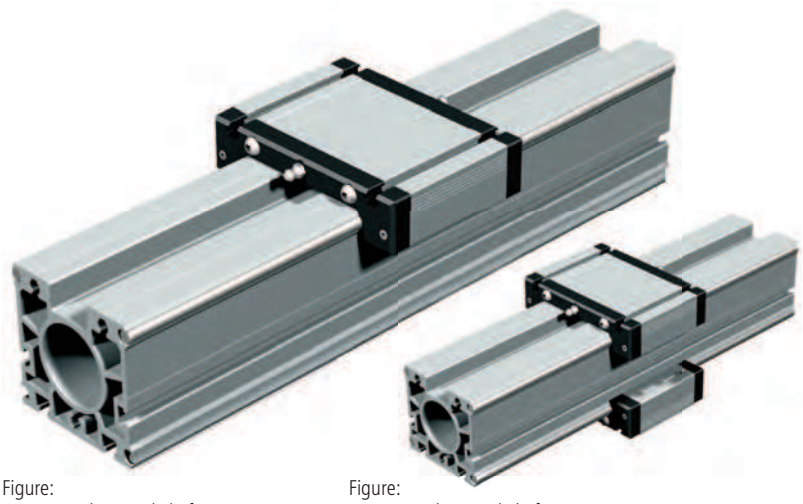

Figure:
LFS-8-4 with 2 steel shafts
and an aluminium slot

Figure:
LFS-8-4 with 4 steel shafts
and two aluminium slide (optional)

## Features

- W 80 x H 80 mm
- 4 precision steel shafts Ø 8
- anti-twist
- aluminium shaft housing profiles, naturally anodised
- fixing from below with M6 tapped rails in the T-slot inserts or in the head side through M8 drillings
- side T-key inserts for limit switch securing
- conditionally self-supporting
- special lengths to order
- weight: approx. 7.2 kg/m
- options: stainless steel version
  with 2 steel shafts
  2 slide or trolley

## Ordering key

**235 00X XXXX**

Standard = **6**
Stainless = **7**

Length in mm (in 100 mm raster)
e.g. **0029** = Length 298
**0299** = Length 2998

Steel shaft length: total length L - 3 mm

Profile up to 6000 mm available without impact connection, steel shafts divided.

## Load data

| Shaft slide WS 3/70 | |
|---|---|
| $C_o$ | 3141 N |
| C | 1879 N |
| $F_1$ static | 2682 N |
| $F_1$ dynamic | 1604 N |
| $F_2$ static | 3141 N |
| $F_2$ dynamic | 1879 N |
| $M_x$ static | 115.7 Nm |
| $M_y$ static | 105.3 Nm |
| $M_z$ static | 123.3 Nm |
| $M_x$ dynamic | 69.2 Nm |
| $M_y$ dynamic | 62.9 Nm |
| $M_z$ dynamic | 73.7 Nm |

| Shaft slide WS 3 | |
|---|---|
| $C_o$ | 6945 N |
| C | 3190 N |
| $F_1$ static | 5931 N |
| $F_1$ dynamic | 2724 N |
| $F_2$ static | 6945 N |
| $F_2$ dynamic | 3190 N |
| $M_x$ static | 255.9 Nm |
| $M_y$ static | 232.8 Nm |
| $M_z$ static | 272.5 Nm |
| $M_x$ dynamic | 117.5 Nm |
| $M_y$ dynamic | 106.9 Nm |
| $M_z$ dynamic | 125.1 Nm |

| Trolley LW 7 | |
|---|---|
| $C_o$ | 2160 N |
| C | 4000 N |
| $F_1$ static | 4320 N |
| $F_1$ dynamic | 3792 N |
| $F_2$ static | 2160 N |
| $F_2$ dynamic | 4000 N |
| $M_x$ static | 246.8 Nm |
| $M_y$ static | 302.4 Nm |
| $M_z$ static | 151.2 Nm |
| $M_x$ dynamic | 216.7 Nm |
| $M_y$ dynamic | 265.4 Nm |
| $M_z$ dynamic | 280 Nm |

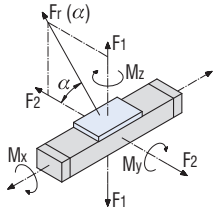


$$Fr(\alpha) = \frac{F2}{\cos \alpha}$$

$$Fr(\alpha) = \frac{F1}{\sin \alpha}$$

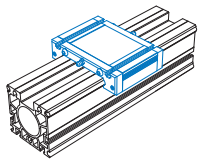

### Aluminium slide

- Clamping surface plane milled
- M6 T-slot inserts
- Central lubrication option
- Adjustable for no play
- Option: stainless steel version

L 96 x W 130 x H 32 mm (WS 3/70)
(weight: approx. 0.5 kg)
Part no.: **223103 0070**
Stainless steel: **223103 1070**

L 176 x W 130 x H 32 mm (WS 3)
(weight: approx. 0.9 kg)
Part no.: **223103**
Stainless steel: **223103 1000**

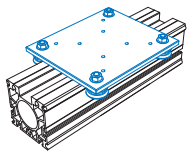

### Trolley LW 7

- L 175 x W 150 x H 7.5 mm
- ground steel plate
- 4 rollers Ø 31, sealed for life
- adjustable for no play
- weight: approx. 2 kg

Part no.: **223012**

# Linear guide rails LFS-8-4



## Bending

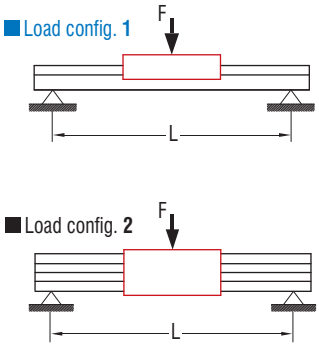


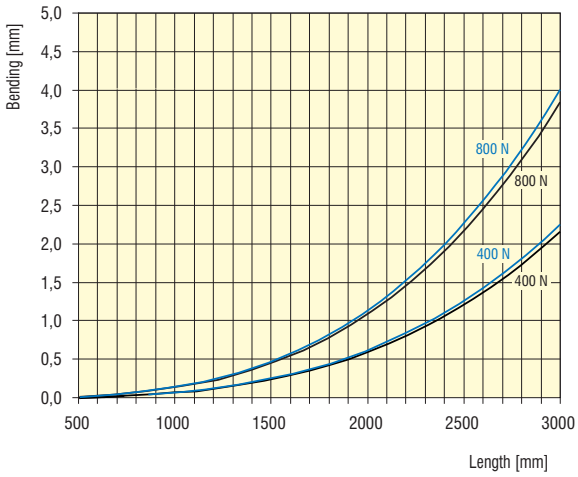


## Dimensioned drawings

LFS-8-3 with aluminium slide **WS 3/70 or WS 3**

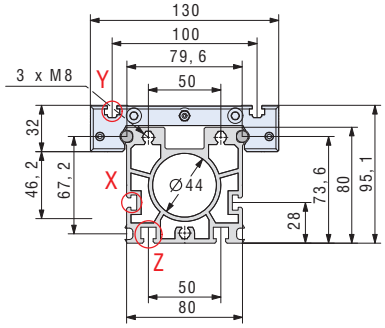


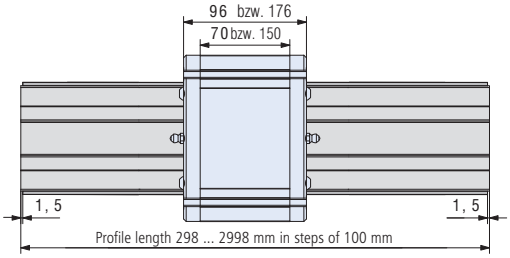


**LFS-8-4** with trolley **LW 7**

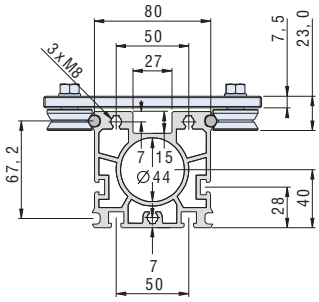


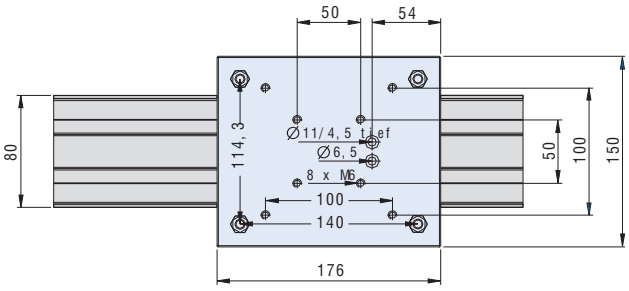


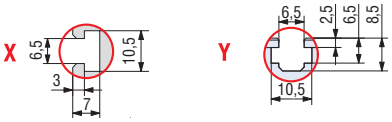


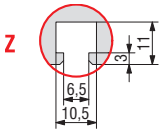

# Linear guide rails

# LFS-12-1

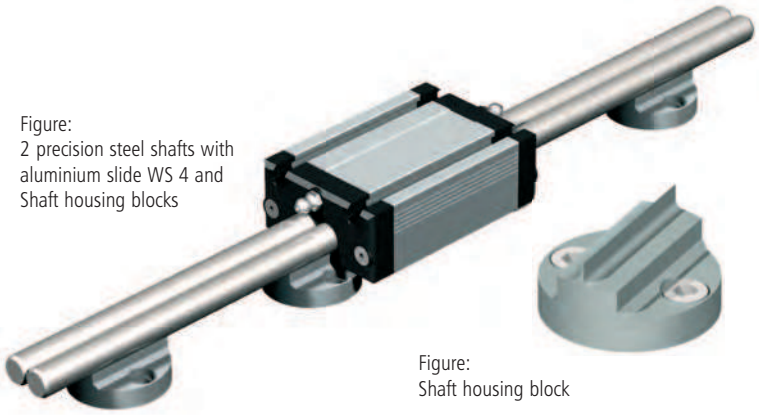

Figure:
2 precision steel shafts with aluminium slide WS 4 and Shaft housing blocks

Figure:
Shaft housing block

## Features

- W 40 x H 27 mm
- 2 precision steel shafts Ø 12
- anti-twist
- aluminium shaft housing blocks
- securing from above or below with M6 drillings in the housing blocks
- guide any length up to 3m
- special lengths to order
- weight: approx. 1.9 kg/m

## Ordering key

**227 312 XXXX**

Length in mm (in 100 mm raster)
e.g. **0298** = Length 298
**2998** = Length 2998

Special lengths to order

**N.B.!**
**The part no. refers to one steel shaft only !**

## Load data

| Shaft slide WS 4/70 | |
|---|---|
| $C_o$ | 3003 N |
| C | 1873 N |
| $F_1$ static | 2821 N |
| $F_1$ dynamic | 1599 N |
| $F_2$ static | 3303 N |
| $F_2$ dynamic | 1873 N |
| $M_x$ static | 29.8 Nm |
| $M_y$ static | 105.3 Nm |
| $M_z$ static | 123.3 Nm |
| $M_x$ dynamic | 16.8 Nm |
| $M_y$ dynamic | 59.7 Nm |
| $M_z$ dynamic | 69.9 Nm |

| Shaft slide WS 4 | |
|---|---|
| $C_o$ | 4868 N |
| C | 2426 N |
| $F_1$ static | 4157 N |
| $F_1$ dynamic | 2071 N |
| $F_2$ static | 4868 N |
| $F_2$ dynamic | 2426 N |
| $M_x$ static | 43.9 Nm |
| $M_y$ static | 155.2 Nm |
| $M_z$ static | 181.7 Nm |
| $M_x$ dynamic | 21.8 Nm |
| $M_y$ dynamic | 77.3 Nm |
| $M_z$ dynamic | 90.5 Nm |

| Steel slide LS 1 | |
|---|---|
| $C_o$ | 3508 N |
| C | 2105 N |
| $F_1$ static | 3549 N |
| $F_1$ dynamic | 2130 N |
| $F_2$ static | 3508 N |
| $F_2$ dynamic | 2105 N |
| $M_x$ static | 36.2 Nm |
| $M_y$ static | 129.0 Nm |
| $M_z$ static | 127.5 Nm |
| $M_x$ dynamic | 21.7 Nm |
| $M_y$ dynamic | 77.4 Nm |
| $M_z$ dynamic | 76.5 Nm |

| Trolley LW 8 | |
|---|---|
| $C_o$ | 2160 N |
| C | 4000 N |
| $F_1$ static | 4320 N |
| $F_1$ dynamic | 3846 N |
| $F_2$ static | 2160 N |
| $F_2$ dynamic | 4000 N |
| $M_x$ static | 109.5 Nm |
| $M_y$ static | 194.4 Nm |
| $M_z$ static | 97.2 Nm |
| $M_x$ dynamic | 97.4 Nm |
| $M_y$ dynamic | 173.0 Nm |
| $M_z$ dynamic | 180.0 Nm |

$$F_r(\alpha) = \frac{F_2}{\cos\alpha}$$

$$F_r(\alpha) = \frac{F_1}{\sin\alpha}$$

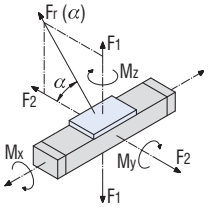


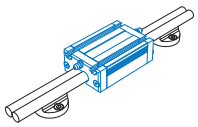

### Aluminium slide

- clamping surface plane milled
- weight: approx. 0.3 kg
- option: stainless steel version

L 94 x W 62 x H 31.5 mm (WS 4/70)
Part no.: **223104 0070**
Stainless steel: **223104 1070**

L 124 x W 62 x H 31.5 mm (WS 4)
Part no.: **223104**
Stainless steel: **223104 1000**

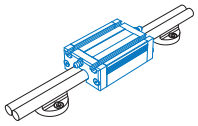

### Steel slide LS 1

L 91 x W 60 x H 32 mm
- clamping surface ground
- weight: approx. 0.8 kg

Part no.: **223006**

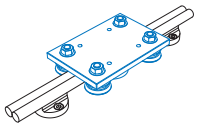

### Trolley LW 3

L 125 x W 85 x H 7.7 mm
- ground steel plate
- weight: approx. 0.9 kg

Part no.: **223008**

### Shaft housing blocks

- Ø 40 mm, hole spacing 28 mm
- cast zinc, VE 10 units

Part no.: **221501**

# Linear guide rails LFS-12-1



## Dimensioned drawings

**LFS-12-1** with trolley **LW 3**

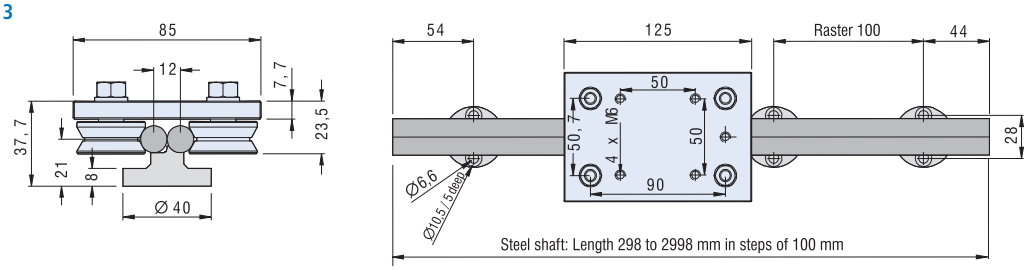


**LFS-12-1** with
Shaft slide **WS 4/70** or **WS 4**

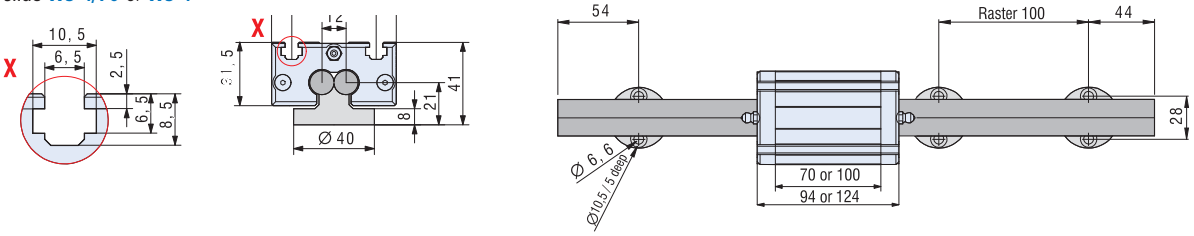


**LFS-12-1** with steel slide **LS 1**

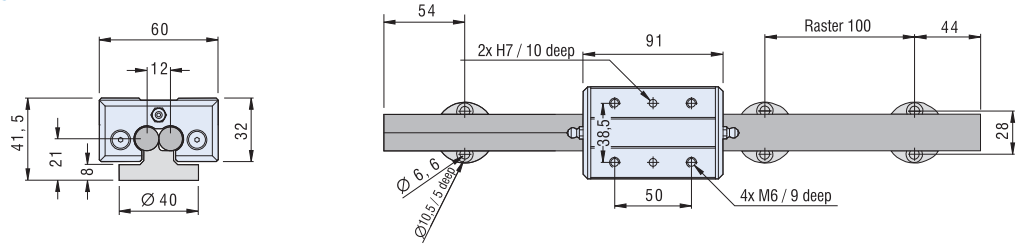


Shaft housing block

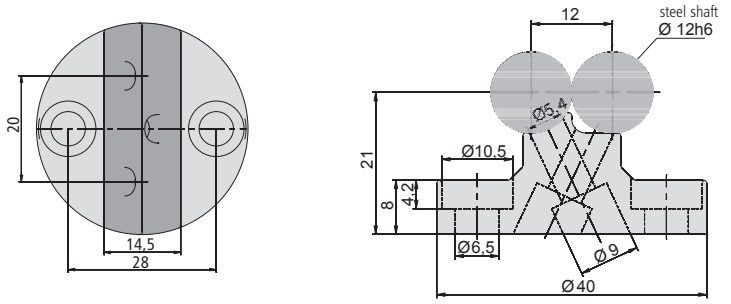

mechanics

# Linear guide rail

# LFS-12-11

## Features

- W 20 x H 31 mm
- Precision steel shaft Ø 12
- Aluminium shaft housing profile, naturally anodised
- Securing from below with M6 tapped rail in T-slot insert on flat surface
- Special lengths available on request
- Weight: approx. 1.3 kg/m

## Ordering key

**220 002 XXXX**

Length in mm
e.g. **0298** = Length 298
**0998** = Length 998

Profile length = Length overall L -2 mm

## Load data

| Shaft slides WS 6/70 | |
|---|---|
| $C_o$ | 3303 N |
| C | 1873 N |
| $F_1$ static | 2821 N |
| $F_1$ dynamic | 1599 N |
| $F_2$ static | 3303 N |
| $F_2$ dynamic | 1873 N |
| $M_x$ static | - |
| $M_y$ static | 105.3 Nm |
| $M_z$ static | 123.3 Nm |
| $M_x$ dynamic | - |
| $M_y$ dynamic | 59.7 Nm |
| $M_z$ dynamic | 69.9 Nm |

| Shaft slides WS 6 | |
|---|---|
| $C_o$ | 4868 N |
| C | 2426 N |
| $F_1$ static | 4157 N |
| $F_1$ dynamic | 2071 N |
| $F_2$ static | 4868 N |
| $F_2$ dynamic | 2426 N |
| $M_x$ static | - |
| $M_y$ static | 155.2 Nm |
| $M_z$ static | 181.7 Nm |
| $M_x$ dynamic | - |
| $M_y$ dynamic | 77.3 Nm |
| $M_z$ dynamic | 90.5 Nm |

| Trolley LW 5 | |
|---|---|
| $C_o$ | 2160 N |
| C | 4000 N |
| $F_1$ static | 4320 N |
| $F_1$ dynamic | 3846 N |
| $F_2$ static | 2160 N |
| $F_2$ dynamic | 4000 N |
| $M_x$ static | - |
| $M_y$ static | 162.0 Nm |
| $M_z$ static | 81.0 Nm |
| $M_x$ dynamic | - |
| $M_y$ dynamic | 144.2 Nm |
| $M_z$ dynamic | 150.0 Nm |

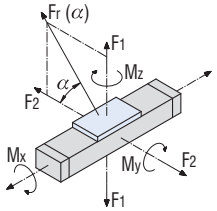


$$Fr(\alpha) = \frac{F2}{\cos \alpha}$$

$$Fr(\alpha) = \frac{F1}{\sin \alpha}$$

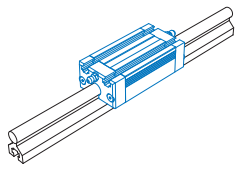

### Aluminium slides

- With recirculating ball guide
- M6 T-slot inserts
- Central lubrication system option
- Adjustable for no play
- Option: stainless steel version

L 96 x W 50 x H 31.5 mm (WS 6/70)
(weight: approx. 0.3 kg)
Part no.: **223106 0070**
Stainless steel: **223106 1070**

L 126 x W 50 x H 31,5 mm (WS 6)
(weight: approx. 0.5 kg)
Part no.: **223106**
Stainless steel: **223106 1000**

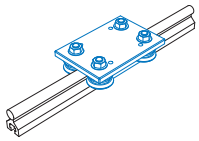

### Trolley LW 5

- L 110 x W 75 x H 7.7 mm
- Ground steel plate
- 4 rollers Ø 31, sealed for life
- Adjustable for no play
- Weight: 0.81 kg

Part no.: **223010**

# Linear guide rail LFS-12-11

## Bending

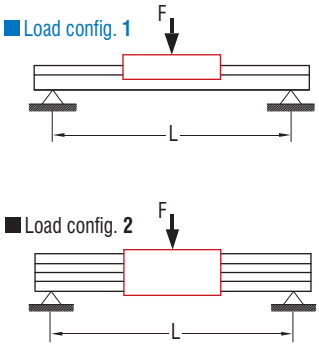


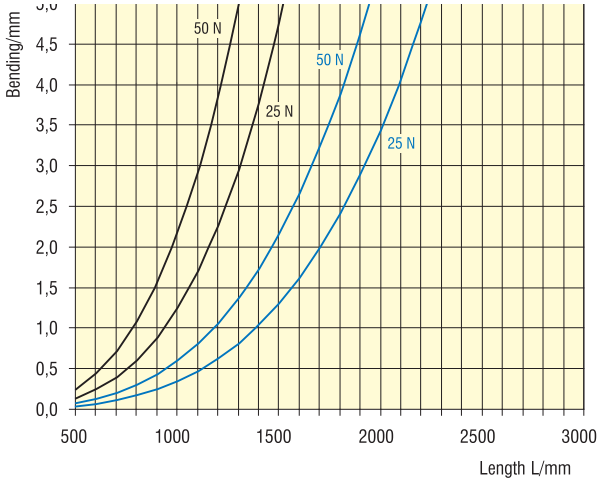


## Dimensioned drawings

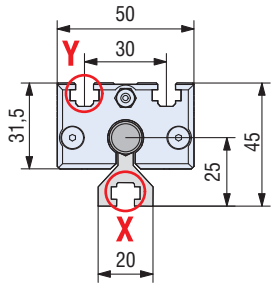


**LFS-12-11** with aluminium slides **WS 6/70 or WS 6**

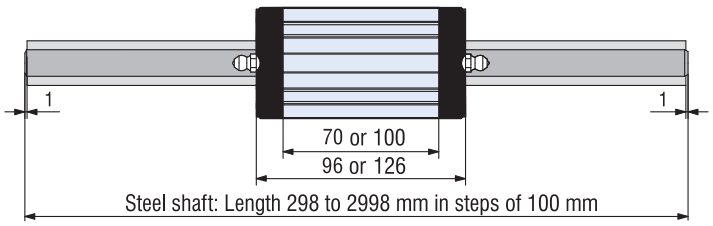


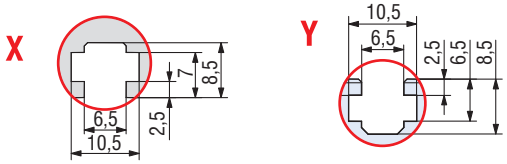


**LFS-12-11** with trolley **LW 5**

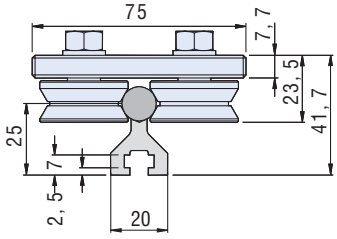


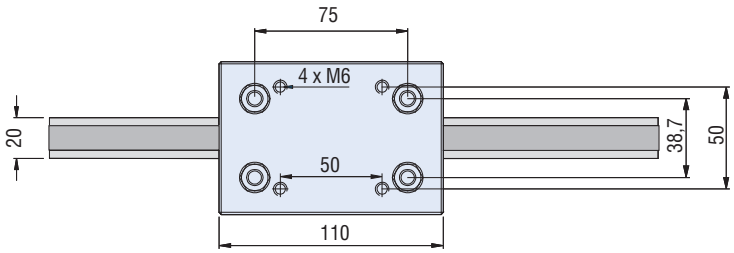

mechanics

# Linear guide rail

# LFS-12-2

## Features

- W 62 x H 31 mm
- 2 precision steel shafts ∅ 12
- Anti-twist lock
- Aluminium shaft housing profile, naturally anodised
- High parallelism through patented shaft housing outline
- High guidance accuracy
- Securing from above or below using drilled holes ∅ 6.5 in 100 mm raster on flat surface
- Lengths in 100 mm raster
- Max. length up to 2998 mm
- Special lengths to order
- Weight: approx. 3.3 kg/m

## Ordering key

**235 200 XXXX**

Length in mm
e.g. **0298** = Length 298
**0998** = Length 998

Profile length = Length overall L -2 mm

## Load data

| Shaft slides WS 4/70 | |
|---|---|
| $C_o$ | 3003 N |
| C | 1873 N |
| $F_1$ static | 2821 N |
| $F_1$ dynamic | 1599 N |
| $F_2$ static | 3303 N |
| $F_2$ dynamic | 1873 N |
| $M_x$ static | 29.8 Nm |
| $M_y$ static | 105.3 Nm |
| $M_z$ static | 123.3 Nm |
| $M_x$ dynamic | 16.8 Nm |
| $M_y$ dynamic | 59.7 Nm |
| $M_z$ dynamic | 69.9 Nm |

| Shaft slides WS 4 | |
|---|---|
| $C_o$ | 4868 N |
| C | 2426 N |
| $F_1$ static | 4157 N |
| $F_1$ dynamic | 2071 N |
| $F_2$ static | 4868 N |
| $F_2$ dynamic | 2426 N |
| $M_x$ static | 43.9 Nm |
| $M_y$ static | 155.2 Nm |
| $M_z$ static | 181.7 Nm |
| $M_x$ dynamic | 21.8 Nm |
| $M_y$ dynamic | 77.3 Nm |
| $M_z$ dynamic | 90.5 Nm |

| Trolley LW 3 | |
|---|---|
| $C_o$ | 2160 N |
| C | 4000 N |
| $F_1$ static | 4320 N |
| $F_1$ dynamic | 3846 N |
| $F_2$ static | 2160 N |
| $F_2$ dynamic | 4000 N |
| $M_x$ static | 109.5 Nm |
| $M_y$ static | 194.4 Nm |
| $M_z$ static | 97.2 Nm |
| $M_x$ dynamic | 97.4 Nm |
| $M_y$ dynamic | 173.0 Nm |
| $M_z$ dynamic | 180.0 Nm |

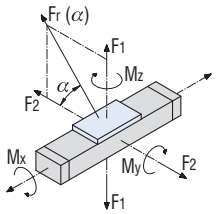


$$Fr(\alpha) = \frac{F2}{\cos \alpha}$$

$$Fr(\alpha) = \frac{F1}{\sin \alpha}$$

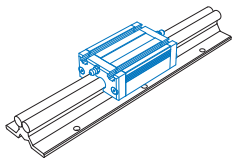

### Aluminium slides

- With recirculating ball guide
- Clamping surface plane milled
- Option: stainless steel version

L 94 x W 62 x H 31.5 mm (WS 4/70)
(weight: approx. 0.33 kg)
Part no.: **223104 0070**
Stainless steel: **223104 1070**

L 124 x W 62 x H 31.5 mm (WS 4)
(weight: approx. 0.46 kg)
Part no.: **223104**
Stainless steel: **223104 1000**

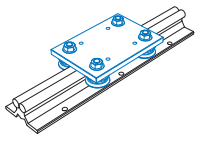

### Trolley LW 3

- L 125 x W 85 x H 7.7 mm
- Ground steel plate
- Weight: 0.93 kg

Part no.: **223008**

# Linear guide rail LFS-12-2

## Bending

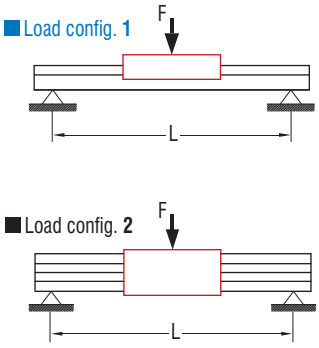


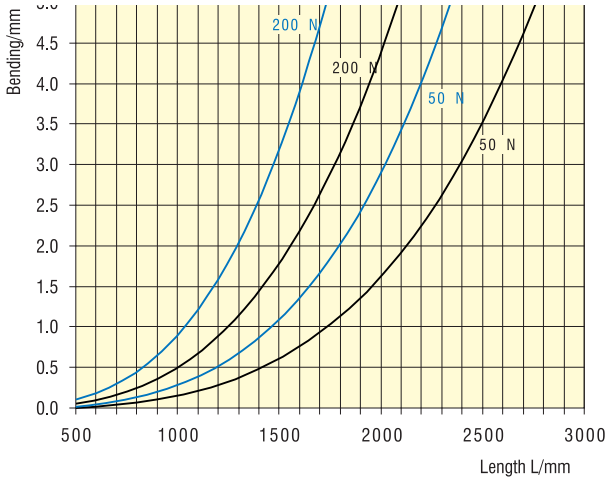


## Dimensioned drawings

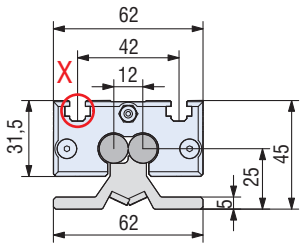


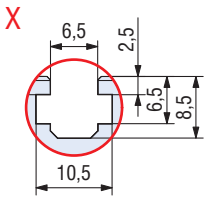


LFS-12-2 with aluminium slides **WS 4/70** or **WS 4**

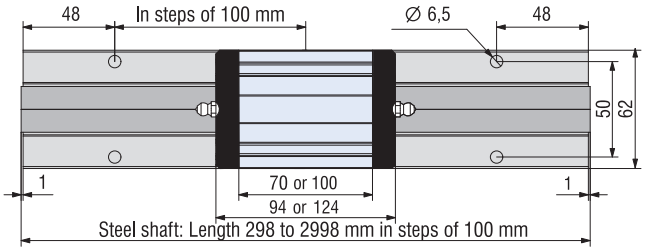


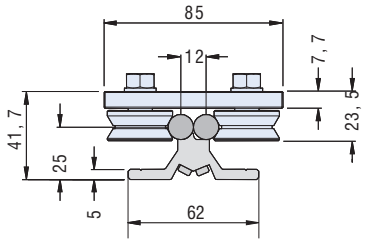


LFS-12-2 with trolley LW3

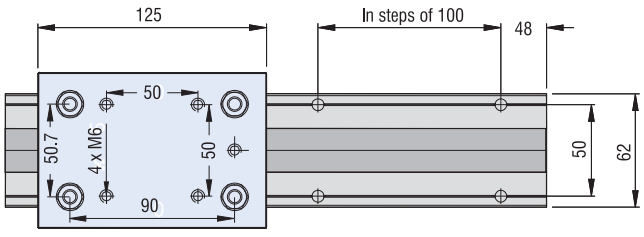

# Linear guide rail

# LFS-12-3

## Features

- W 90 x H 31 mm
- 2 precision steel shafts Ø 12
- Anti-twist
- Aluminium shaft housing profile, naturally anodised
- increased shaft spacing allows higher torques to be absorbed
- Securing from above or below with M6 drillings in 100 mm raster
- Any guide length
- Weight: approx. 3.9 kg/m

## Ordering key

**235 300 XXXX**

Length in mm (in 100 mm raster)
e.g. **0029** = Length 298
**0299** = Length 2998

Profile length = Length overall L -2 mm

Special lengths over 3000 mm with rod linkage to order.

## Load data

| Shaft slides WS 7/70 | |
|---|---|
| $C_0$ | 3303 N |
| C | 1873 N |
| $F_1$ static | 2821 N |
| $F_1$ dynamic | 1599 N |
| $F_2$ static | 3303 N |
| $F_2$ dynamic | 1873 N |
| $M_x$ static | 82.0 Nm |
| $M_y$ static | 105.3 Nm |
| $M_z$ static | 123.3 Nm |
| $M_x$ dynamic | 46.4 Nm |
| $M_y$ dynamic | 59.7 Nm |
| $M_z$ dynamic | 69.9 Nm |

| Shaft slides WS 7 | |
|---|---|
| $C_0$ | 7303 N |
| C | 3179 N |
| $F_1$ static | 6237 N |
| $F_1$ dynamic | 2715 N |
| $F_2$ static | 7303 N |
| $F_2$ dynamic | 3179 N |
| $M_x$ static | 181.2 Nm |
| $M_y$ static | 232.8 Nm |
| $M_z$ static | 272.5 Nm |
| $M_x$ dynamic | 78.8 Nm |
| $M_y$ dynamic | 101.3 Nm |
| $M_z$ dynamic | 118.6 Nm |

| Trolley LW 2 | |
|---|---|
| $C_0$ | 3114 N |
| C | 1846 N |
| $F_1$ static | 2659 N |
| $F_1$ dynamic | 1576 N |
| $F_2$ static | 3114 N |
| $F_2$ dynamic | 1846 N |
| $M_x$ static | 216.0 Nm |
| $M_y$ static | 100.5 Nm |
| $M_z$ static | 108.0 Nm |
| $M_x$ dynamic | 168.4 Nm |
| $M_y$ dynamic | 192.3 Nm |
| $M_z$ dynamic | 200.0 Nm |

| Trolley LW 8 | |
|---|---|
| $C_0$ | 2160 N |
| C | 4000 N |
| $F_1$ static | 4320 N |
| $F_1$ dynamic | 3846 N |
| $F_2$ static | 2160 N |
| $F_2$ dynamic | 4000 N |
| $M_x$ static | 189.2 Nm |
| $M_y$ static | 248.4 Nm |
| $M_z$ static | 124.2 Nm |
| $M_x$ dynamic | 168.4 Nm |
| $M_y$ dynamic | 221.1 Nm |
| $M_z$ dynamic | 230.0 Nm |

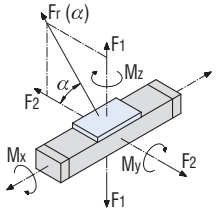


$$Fr(\alpha) = \frac{F2}{\cos \alpha}$$

$$Fr(\alpha) = \frac{F1}{\sin \alpha}$$

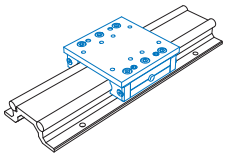

### Slides

- Ground steel plate
- Central lubrication system option
- Adjustable for no play

L 100 x W 100 x H 32 mm (WS 7/70)
(weight: approx. 0.8 kg)
Part no.: **223107 0070**

L 200 x W 100 x H 32 mm (WS 7)
(weight: approx. 1.7 kg)
Part no.: **223107**

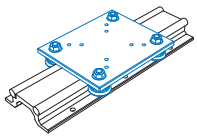

### Trolley LW 8

- L 150 x W 125 x H 7.5 mm
- Ground steel plate
- 4 rollers Ø 31, sealed for life
- Adjustable for no play
- Weight: 1.51 kg

Part no.: **223013**

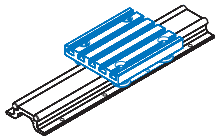

### Trolley LW 2

- L 150 x W 125 x H 34.5 mm
- Aluminium T-slot plate
- 4 rollers Ø 31, sealed for life
- Adjustable for no play
- Weight: 0.97 kg

Part no.: **223005**

# Linear guide rail LFS-12-3

## Bending

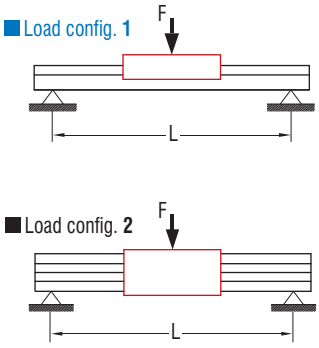


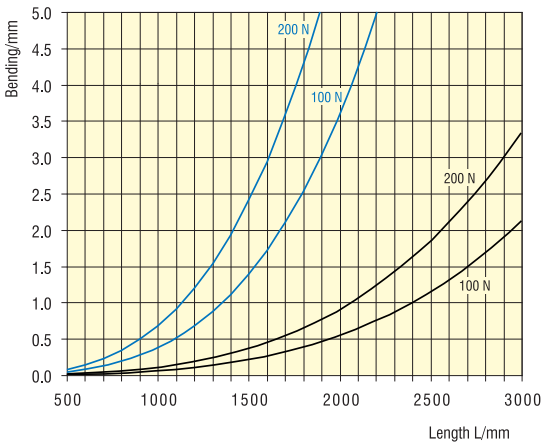


## Dimensioned drawings

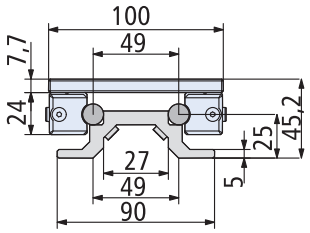


**LFS-12-3** with aluminium slides **WS 7**

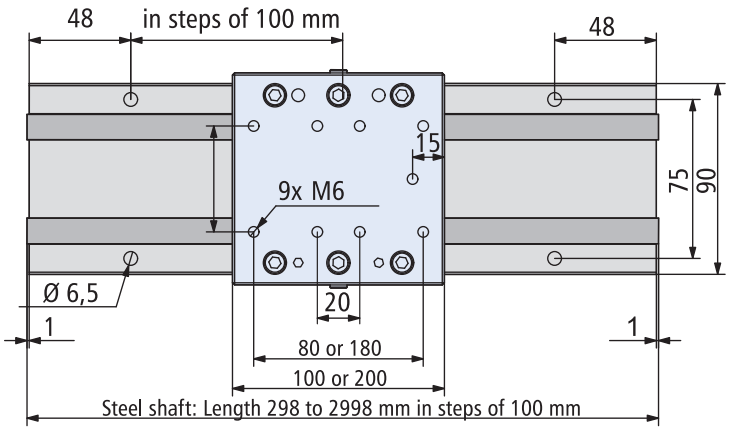


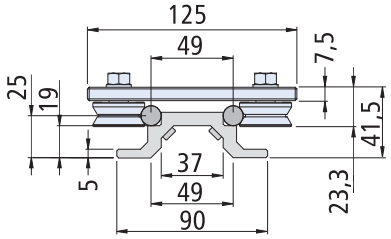


**LFS-12-3** with Carriage **LW 8**

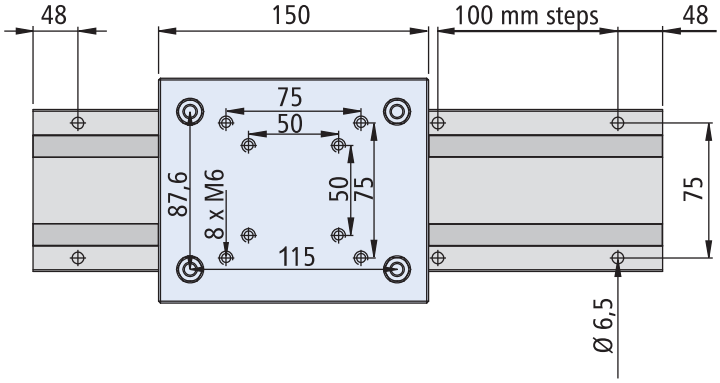


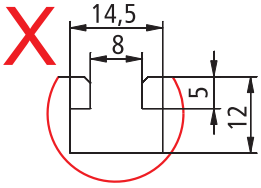


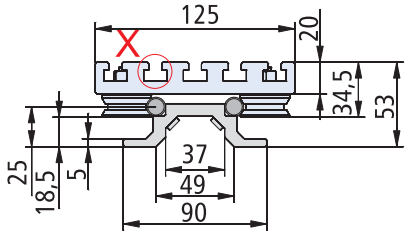


**LFS-12-3** with Carriage **LW 2**

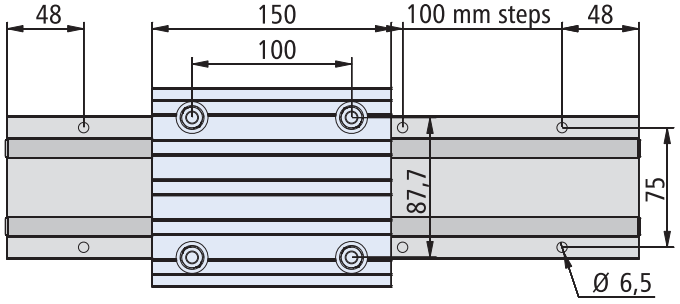

# Linear guide rail

# LFS-12-10

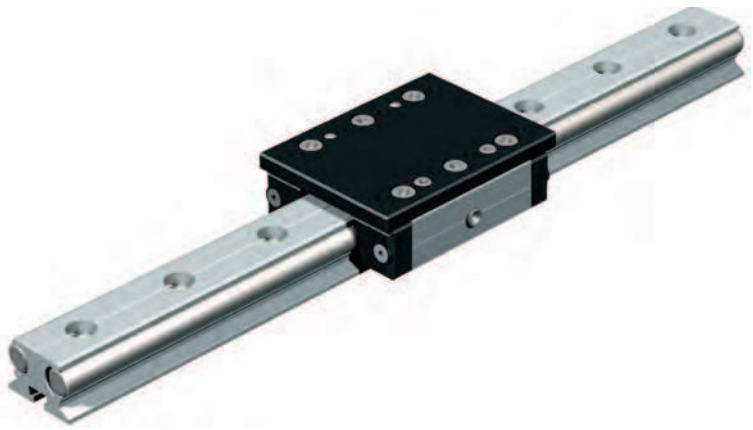

## Features

- W 36 x H 24.5 mm
- 2 precision steel shafts Ø 12
- Anti-twist
- Aluminium shaft housing profile, naturally anodised
- Fixing from below with M6 tapped rail in T-slot insert and from above M6 drillings in the Raster 50 mm
- Conditionally self-supporting
- Special lengths to order
- Weight: approx. 2.9 kg/m

## Ordering key

**220 001 XXXX**

Length in mm (in 100 mm raster)
e.g. **0300** = Length 296
**3000** = Length 2996

Profile length = Length overall L -1 mm

Special lengths over 3000 mm with rod linkage to order.

## Load data

| Slides WS 8/70 | |
|---|---|
| $C_o$ | 3303 N |
| C | 1873 N |
| $F_1$ static | 2821 N |
| $F_1$ dynamic | 1599 N |
| $F_2$ static | 3303 N |
| $F_2$ dynamic | 1873 N |
| $M_x$ static | 46.7 Nm |
| $M_y$ static | 105.3 Nm |
| $M_z$ static | 123.3 Nm |
| $M_x$ dynamic | 26.4 Nm |
| $M_y$ dynamic | 59.7 Nm |
| $M_z$ dynamic | 69.9 Nm |

| Slides WS 8 | |
|---|---|
| $C_o$ | 4868 N |
| C | 2426 N |
| $F_1$ static | 4157 N |
| $F_1$ dynamic | 2071 N |
| $F_2$ static | 4868 N |
| $F_2$ dynamic | 2426 N |
| $M_x$ static | 68.8 Nm |
| $M_y$ static | 155.2 Nm |
| $M_z$ static | 181.7 Nm |
| $M_x$ dynamic | 34.2 Nm |
| $M_y$ dynamic | 77.3 Nm |
| $M_z$ dynamic | 90.5 Nm |

| Trolley LW 4 | |
|---|---|
| $C_o$ | 2160 N |
| C | 4000 N |
| $F_1$ static | 4320 N |
| $F_1$ dynamic | 3846 N |
| $F_2$ static | 2160 N |
| $F_2$ dynamic | 4000 N |
| $M_x$ static | 135.4 Nm |
| $M_y$ static | 194.4 Nm |
| $M_z$ static | 97.2 Nm |
| $M_x$ dynamic | 120.5 Nm |
| $M_y$ dynamic | 173.0 Nm |
| $M_z$ dynamic | 180.0 Nm |

| | Dual track set 1 | Dual track set 2 |
|---|---|---|
| $C_o$ | 645 N | 1905 N |
| C | 600 N | 1125 N |
| $F_1$ static | 652 N | 1927 N |
| $F_1$ dynamic | 607 N | 1138 N |
| $F_2$ static | 645 N | 1905 N |
| $F_2$ dynamic | 600 N | 1125 N |
| $M_x$ static | 16.0 Nm | 46.0 Nm |
| $M_y$ static | 13.0 Nm | 119 Nm |
| $M_z$ static | 13.0 Nm | 118 Nm |
| $M_x$ dynamic | 15.0 Nm | 27.0 Nm |
| $M_y$ dynamic | 12.0 Nm | 71.0 Nm |
| $M_z$ dynamic | 12.0 Nm | 70.0 Nm |

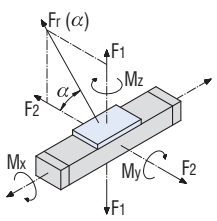


$$Fr(\alpha) = \frac{F2}{\cos \alpha}$$

$$Fr(\alpha) = \frac{F1}{\sin \alpha}$$

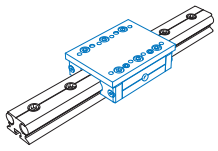

### Slides

- Ground steel plate
- Lubrication system option
- Adjustable for no play

L 100 x W 75 x H 31.5 mm (WS 8/70)
(weight: approx. 0.7 kg)
Part no.: **223108 0070**

L 150 x W 75 x H 31.5 mm (WS 8)
(weight: approx. 1,0 kg)
Part no.: **223108**

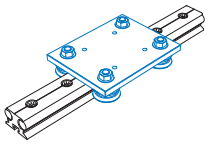

### Trolley LW 4

- L 125 x W 97 x H 7.7 mm
- Ground steel plate
- 4 rollers Ø 31, sealed for life
- Adjustable for no play
- Weight: 1.02 kg

Part no.: **223009**

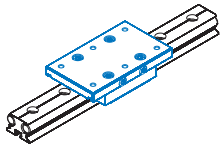

For steel shafts Ø 12 mm

### Dual track set 1

- L75 x W75 x H30.2 mm
- With 2 SMALL linear ball bearings

Part no.: **223001**

### Dual track set 2

- L125 x W75 x H30.2 mm
- With 2 LARGE linear ball bearings

Part no.: **223002**

# Linear guide rail

# LFS-12-10



## Bending

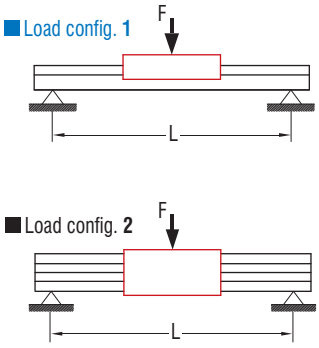


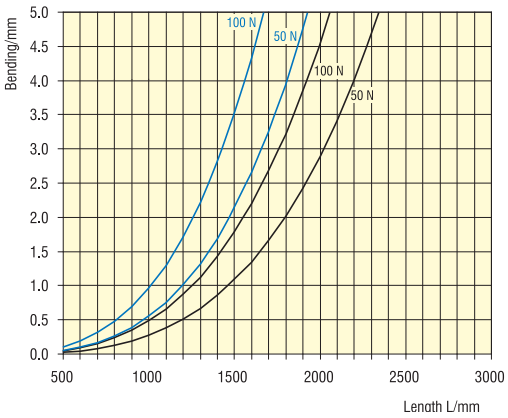


## Dimensioned drawings

**LFS-12-10** with slides **WS 8**

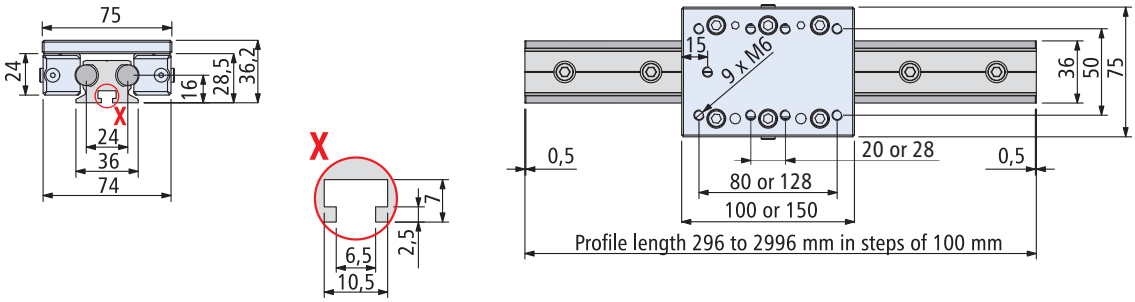


**LFS-12-10** with trolley LW 4

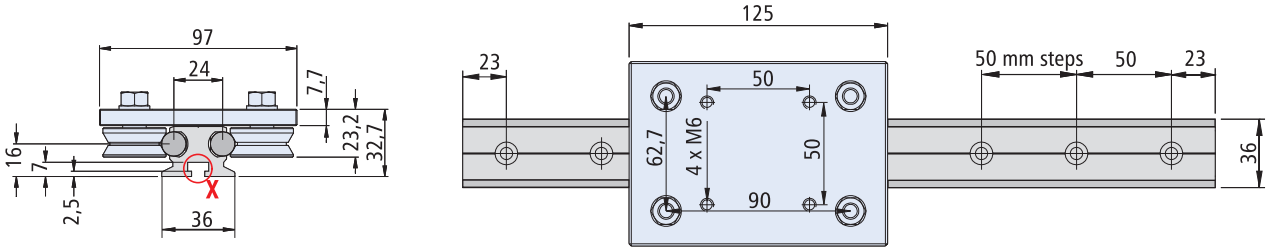


**LFS-12-10** with dual track set

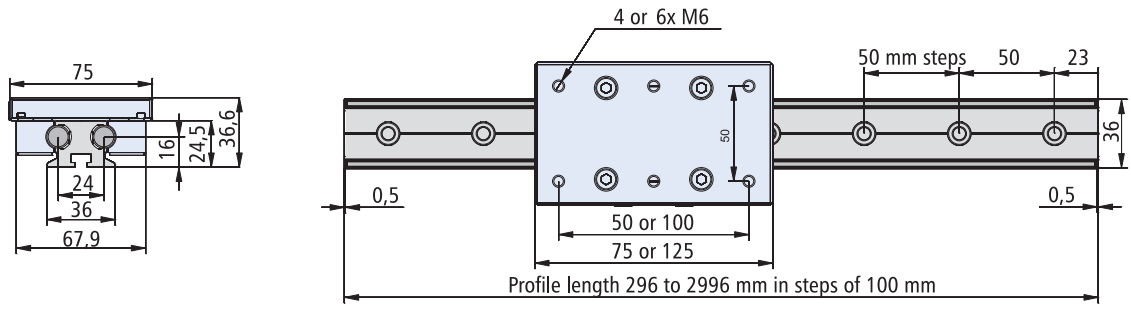

# Linear guide rail LFS-16-120

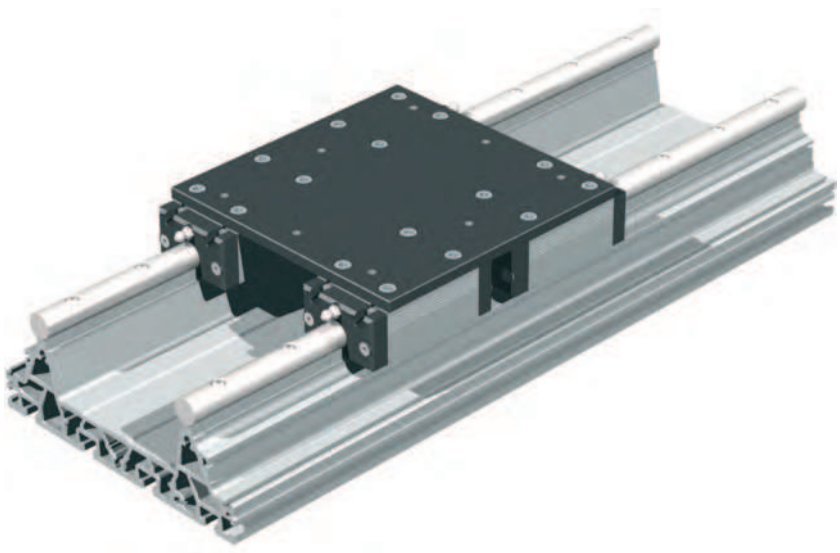

## Features

- W 190 x H 61 mm
- 2 precision steel shafts Ø 16
- Anti-twist
- Aluminium shaft housing profile naturally anodised
- Securing from below with M6 tapped rail in T-slot profile
- Conditionally self-supporting
- Any guide length
- Weight: 10.2 kg/m

## Ordering key

**220 008 XXXX**

Length in mm (in 100 mm raster)
e.g. **0029** = Length 298
**0299** = Length 2998

Profile length = Length overall L -2 mm
Special lengths available on request!

## Load data

$$F_r(\alpha) = \frac{F_2}{\cos \alpha}$$

$$F_r(\alpha) = \frac{F_1}{\sin \alpha}$$

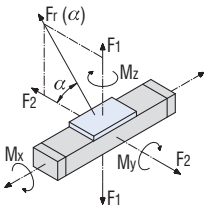


| Einheit mit 2x IWS 1 | |
|---|---|
| $C_0$ | 4929 N |
| C | 2660 N |
| $F_1$ stat. | 4209 N |
| $F_1$ dyn. | 2271 N |
| $F_2$ stat. | 4929 N |
| $F_2$ dyn. | 2660 N |
| $M_x$ stat. | 253 Nm |
| $M_y$ stat. | 147 Nm |
| $M_z$ stat. | 173 Nm |
| $M_x$ dyn. | 136 Nm |
| $M_y$ dyn. | 79 Nm |
| $M_z$ dyn. | 93 Nm |

| Einheit mit 2x ILS 1 | |
|---|---|
| $C_0$ | 7598 N |
| C | 4857 N |
| $F_1$ stat. | 6488 N |
| $F_1$ dyn. | 4148 N |
| $F_2$ stat. | 7598 N |
| $F_2$ dyn. | 4857 N |
| $M_x$ stat. | 389 Nm |
| $M_y$ stat. | 195 Nm |
| $M_z$ stat. | 228 Nm |
| $M_x$ dyn. | 249 Nm |
| $M_y$ dyn. | 124 Nm |
| $M_z$ dyn. | 146 Nm |

| Einheit mit 4x IWS 1 | |
|---|---|
| $C_0$ | 6572 N |
| C | 3546 N |
| $F_1$ stat. | 5612 N |
| $F_1$ dyn. | 3028 N |
| $F_2$ stat. | 6572 N |
| $F_2$ dyn. | 3546 N |
| $M_x$ stat. | 337 Nm |
| $M_y$ stat. | 309 Nm |
| $M_z$ stat. | 361 Nm |
| $M_x$ dyn. | 182 Nm |
| $M_y$ dyn. | 167 Nm |
| $M_z$ dyn. | 195 Nm |

| Einheit mit 4x ILS 1 | |
|---|---|
| $C_0$ | 10130 N |
| C | 6476 N |
| $F_1$ stat. | 8650 N |
| $F_1$ dyn. | 5530 N |
| $F_2$ stat. | 10130 N |
| $F_2$ dyn. | 6476 N |
| $M_x$ stat. | 519 Nm |
| $M_y$ stat. | 476 Nm |
| $M_z$ stat. | 557 Nm |
| $M_x$ dyn. | 332 Nm |
| $M_y$ dyn. | 304 Nm |
| $M_z$ dyn. | 356 Nm |

## Bending

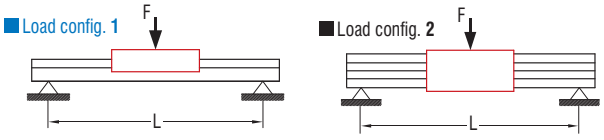


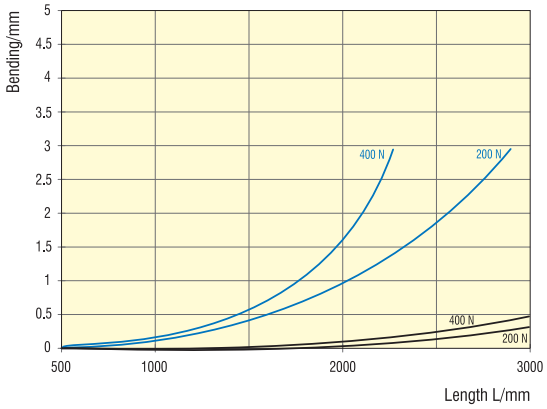

# Linear guide rail LFS-16-120

**Slide unit**
**with 2 × steel slides**
**ILS 1** (kit)

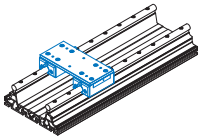

- L 84 x W 178 x H 8 mm
- Ground steel plate
- 2 x ILS 1,
  central lubrication option
- Adjustable for no play
- Total weight: 2.30 kg

Part no.: **223240 0009**

**Slide unit**
**with 2 × aluminium slides**
**IWS 1** (kit)

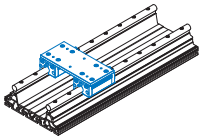

- L 84 x W 178 x H 8 mm
- Ground steel plate
- 2 × IWS 1,
  central lubrication option
- Adjustable for no play
- Total weight: 1.50 kg

Part no.: **223240 0007**

**Slide unit**
**with 4 × aluminium slides**
**IWS 1** (kit)

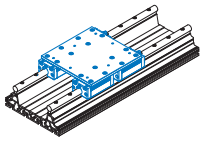

- L 180 x W 178 x H 8 mm
- Ground steel plate
- 4 x IWS 1,
  central lubrication option
- Adjustable for no play

Part no.: **223240 0008**

**Slide unit**
**with 4 × steel slides**
**ILS 1** (kit)

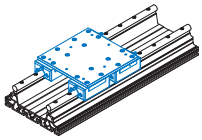

- L 180 x W 178 x H 8 mm
- ground steel plate
- 4 x ILS 1,
  central lubrication option
- Adjustable for no play

Part no.: **223240 0010**

## Dimensioned drawings

Aluminium slides IWS 1

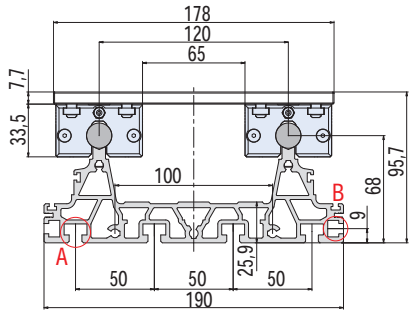


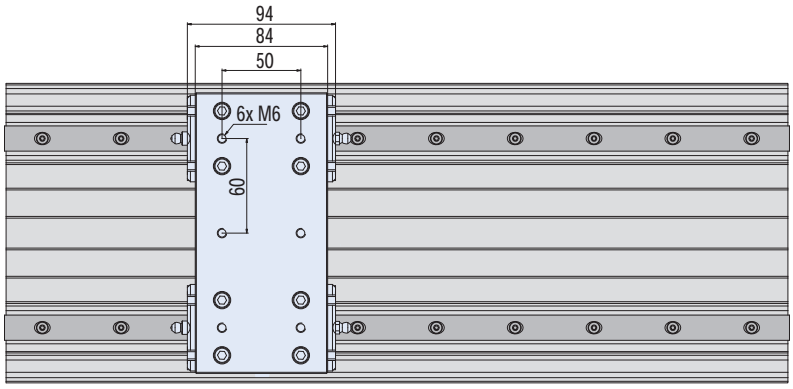


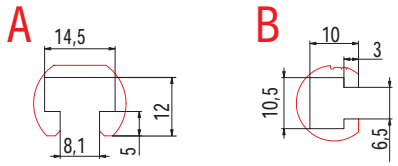


Steel slides ILS 1

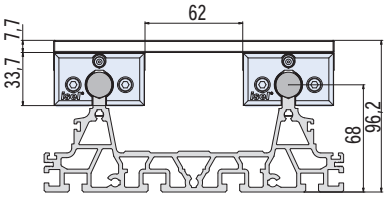


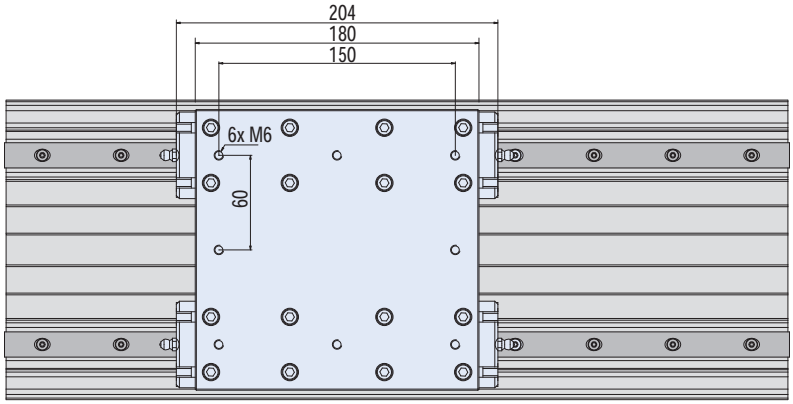

mechanics

# Accessories

## Tapped rail

### M6 tapped rail
- 10 x 4 mm
- Galvanised
- M6 Ra 50 mm
- VE 3 units at 1 m

Part no.: **209 011**

## Sliding nuts

### M6 sliding nut (Figure 1)
- L 25 × W 10 × H 3.5 mm
- Galvanised
- VE 100 unit
- All except PT/RE 40, 65

Part no.: **209 001 0005**

### 2 × M6 sliding nuts (Figure 2)
- L 45 x W 10 x H 3.5
- Galvanised
- VE 50 unit
- For all except PT/RE 40, 65

Part no.: **209 002 0004**

### 2 × M6 sliding nuts (Figure 2)
- L 45 × W 13 × H 6 mm
- Galvanised
- 2 × M6 Ra 25 mm
- VE 25 unit
- For PT/RE 40, 65

Part no.: **209 005 0001**

### Angle sliding nut 2 × M6 (Figure 3)
- Galvanised
- VE 25 units
- For all except PT/RE 40, 65

Part no.: **209 021 0003**

### Special angle sliding nut 3 x M6 (Figure 4)
- Galvanised, VE 25 unit
- For all except PT/RE 40, 65

Part no.: **209 022 0003**

## Sliding nuts

### M5 sliding nuts
- Galvanised • VE 20 unit
- For all except PT25, PT 50, PS 200, RE 40 and RE 65

(Securing only possible from above)

**with spring**
Part no.: **209005 0002**
(M5/Figure 1)
Part no.: **209005 0003**
(M6/Figure 2)

**with large chamfer**
Part no.: **209005 0004**
(M6/Figure 3)

**in rhombus shape**
Part no.: **209005 0005**
(M5/Figure 4)
Part no.: **209005 0006**
(M6/Figure 5)

## Linear ball bearing

For steel shafts Ø 12 mm

### Linear ball bearing **large**
- L80 × W20 × H19 mm, VE 2 units

Part no.: **222 002 0001**

### Linear ball bearing **medium**
- L60 × W20.5 × H17.8 mm, VE2 units

Part no.: **222 000**

### Linear ball bearing **small**
- L40 x W20 x H19 mm, VE 2 units

Part no.: **222 001**

## Grease/grease gun

### Grease
Part no.: **299 032 0002**

### Impact press for grease and oil
Part no.: **299 032 0003**

## Guide shafts

### Guide shaft SF 12/SF 16
- Precision steel shafts Ø 12 or 16 mm, length 3 m
- Hardened and ground
- With M5 blind hole tapping (SF12) or M6 (SF16) in 100 mm raster or with drilled holes for M4 (SF 12) or M5 (SF 16) in 100 mm raster

Part no.: **220019 0299**
(SF12, 3m, with blind holes for M5)
Part no.: **220020 0299**
(SF12, 3m, with stepped holes for M4)
Part no.: **220023 0299**
(SF16, 3m, with stepped holes for M5)
Part no.: **220024 0299**
(SF16, 3m, with blind holes for M6)

## Rollers

### Roller Ø 20 mm for SF 12
- With M4 tapped drilling
- VE 2 units

Part no.: **222 010**

## Rollers

### Roller Ø 21 mm
- Concentric
- VE 2 units

Part no.: **222 003**
- Eccentric
- VE 2 units

Part no.: **222 004**

### Roller Ø 31 mm
- Concentric
- VE 2 units

Part no.: **222 006**
- Eccentric
- VE 2 units

Part no.: **222 007**

# Operating loads calculation

## Effective loading calculation

Various factors affect the calculation of the loading of isel guides. This includes the position of the
C of G of the load, tensile and compressive forces, torques, load and acceleration forces.

For a linear bench on 4 bearings, the bearing forces are calculated according to the force application point for various load directions.

The calculation can also be applied to a slide configuration with 2 slides.

The dimension LL/2 is used as the dimension L (see dimensioned drawings for the relevant guides).

The load factor in this case is CO/2.

## Combined load

If the load alignment of an element does not coincide with one of the main load directions, then the equivalent load is calculated:

$$P = |F_1| + |F_2|$$

If a force F and a torque M load an element simultaneously, then the dynamically equivalent load is:

$$P = |F| + |M| \cdot \frac{C_0}{M_{0(XYZ)}}$$

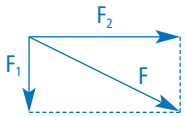


| | |
|---|---|
| P [N] | dynamically equivalent load |
| F [N] | opposing force $= \sqrt{1^2 + F_2^2}$ |
| F1 [N] | vertical component see sketch (4) |
| F2 [N] | horizontal component see sketch (4) |
| C0 [N] | static load factor |
| M [Nm] | opposing torque |
| M0(XYZ) [Nm] | static torque in the direction of the opposing torque |

According to DIN, the dynamically equivalent load should not exceed the value P = 0.5 · C.

## Equivalent load calculation

### Operating conditions

**A** incremental change **B** uniform change

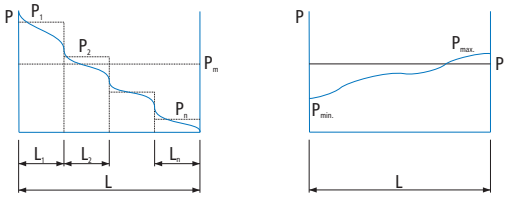


### Equivalent load

$$P = \sqrt[3]{\frac{1}{L} \cdot (P_1^3 \cdot L_1 + P_2^3 \cdot L_2 + P_3^3 \cdot L_{3.....} + P_n^3 \cdot L_n)}$$

$$P = \frac{1}{3} \cdot (P_{min} + 2 \cdot P_{max})$$

| | |
|---|---|
| P | dynamically equivalent load [N] |
| $P_{1...n}$ | Individual load [N] |
| L | Total travel [m] |
| $L_{1...n}$ | Individual travel [m] |

| | |
|---|---|
| $P_{min}$ | smallest load [N] |
| $P_{max}$ | largest load [N] |

## Static safety

| Operating conditions | $S_0$ |
|---|---|
| Normal motion | 1.0 - 3.0 |
| High speed | 2.0 - 4.0 |
| With impacts and vibration | 3.0 - 5.0 |

$$S_0 = \frac{C_0}{P_0} = \frac{M_0}{M}$$

| | |
|---|---|
| $S_0$ | static load safety |
| $C_0$ | static load factor [N] |
| $P_0$ | statically equivalent bearing loading [N] |
| $M_0$ | static loading torque [Nm] |
| M | equivalent static torque [Nm] |

## Nominal working life

**The nominal working life is achieved or exceeded by 90% of an adequately large quantity of identical bearings, before the first signs of material fatigue become apparent.**

$$L = \left(\frac{C}{P}\right)^3$$

$$L_h = \frac{833}{H \cdot n_{OSZ}} \cdot \left(\frac{C}{P}\right)^3$$

$$L_h = \frac{1666}{V} \cdot \left(\frac{C}{P}\right)^3$$

| | |
|---|---|
| L [m] | nominal working life in units of 100,000 m |
| $L_h$ [h] | nominal working life in hours run |
| C [N] | dynamic load factor |
| P [N] | dynamically equivalent load |
| H [m] | single stroke of the oscillating motion |
| $n_{OSZ}$ [min] | Number of double strokes per minute |
| v [m/min] | average speed of movement |

# Operating loads calculation

## Load vertical on the **bench surface**

Loading

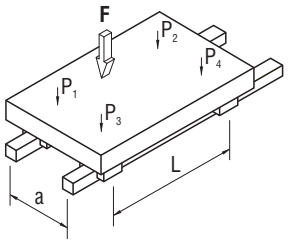


Dimensioned figure

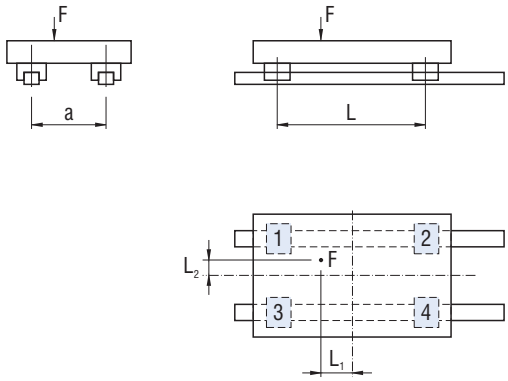


Load on a trolley

$$P_1 = \frac{F}{4} + \frac{F \cdot L_1}{2L} + \frac{F \cdot L_2}{2a}$$

$$P_2 = \frac{F}{4} - \frac{F \cdot L_1}{2L} + \frac{F \cdot L_2}{2a}$$

$$P_3 = \frac{F}{4} + \frac{F \cdot L_1}{2L} - \frac{F \cdot L_2}{2a}$$

$$P_4 = \frac{F}{4} - \frac{F \cdot L_1}{2L} - \frac{F \cdot L_2}{2a}$$

## Load in **direction of motion**

Loading

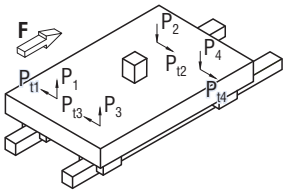


Dimensioned figure

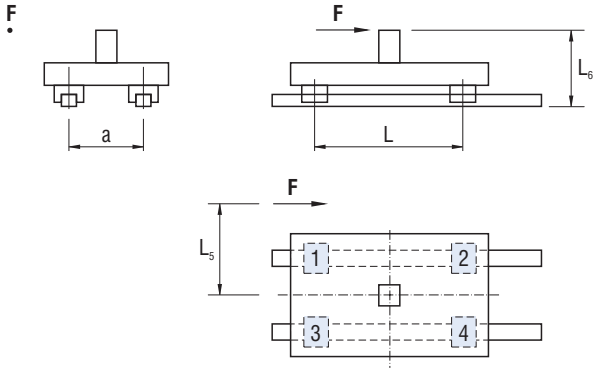


Load on a trolley

$$P_1 \ldots P_4 = \frac{F \cdot L_6}{2L}$$

$$P_{t1} \ldots P_{t4} = \frac{F \cdot L_5}{2L}$$

## Load at right angles to the **direction of motion**

Loading

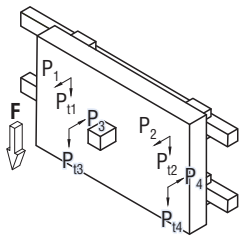


Dimensioned figure

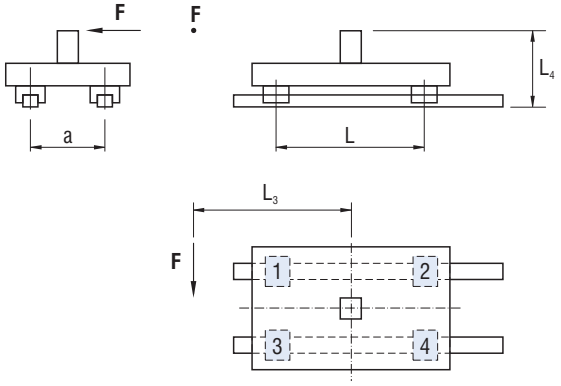


Load on a trolley

$$P_1 \ldots P_4 = \frac{F \cdot L_4}{2a}$$

$$P_{t1} = P_{t3} = \frac{F}{4} + \frac{F \cdot L_3}{2L}$$

$$P_{t2} = P_{t4} = \frac{F}{4} - \frac{F \cdot L_3}{2L}$$

Space for your notes

mechanics

# Drive elements

## Overview


Functional overview 2-45
Ball screw spindle ∅ 16 2-46
Ball screw spindle ∅ 25 2-46
Ball screw nut 2 2-47
Ball screw nut 3 2-47
Clamping blocks for nut version 3 2-48
Flange bearing for spindle ∅ 16 2-49
Flange bearing for spindle ∅ 25 2-49
Bearing supports 2-50


Ball screw nuts supplied by isel Germany are high-quality, precise and wear-free (hardened and ground). Combined with ball screw spindles, ball screw nuts ensure that rotary motion is converted into linear motion at extremely low values of friction.

The ball screw nut is positioned and held in the clamping block using a stud screw. The ball screw nuts contain multiple circulating balls and an internal ball return mechanism.

Adjustment of the clamping block stud screw allows the ball screw spindle to move freely, without backlash.

Repeat accuracy is less than 0.01 mm on a length of 300 mm. The linear drive is lubricated via the grease nipple on the clamping block.

Ball screw spindles are roll manufactured using modern machines prior to hardening and polishing.

Our linear drives are technically advanced and have proven themselves over a period of more than 20 years of practical application.

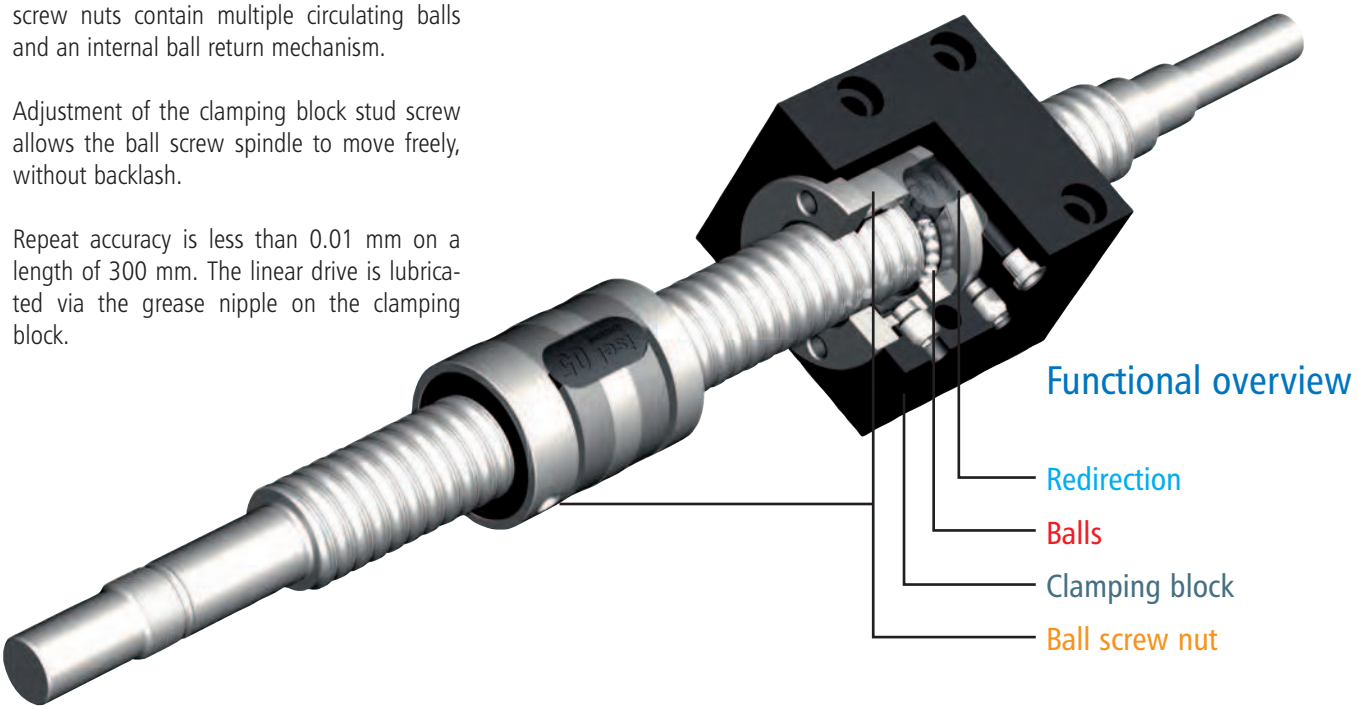

# Drive elements Overview

## Linear drive

The most common variable when using linear drives is whether the spindles are driven directly or via toothed-belt.

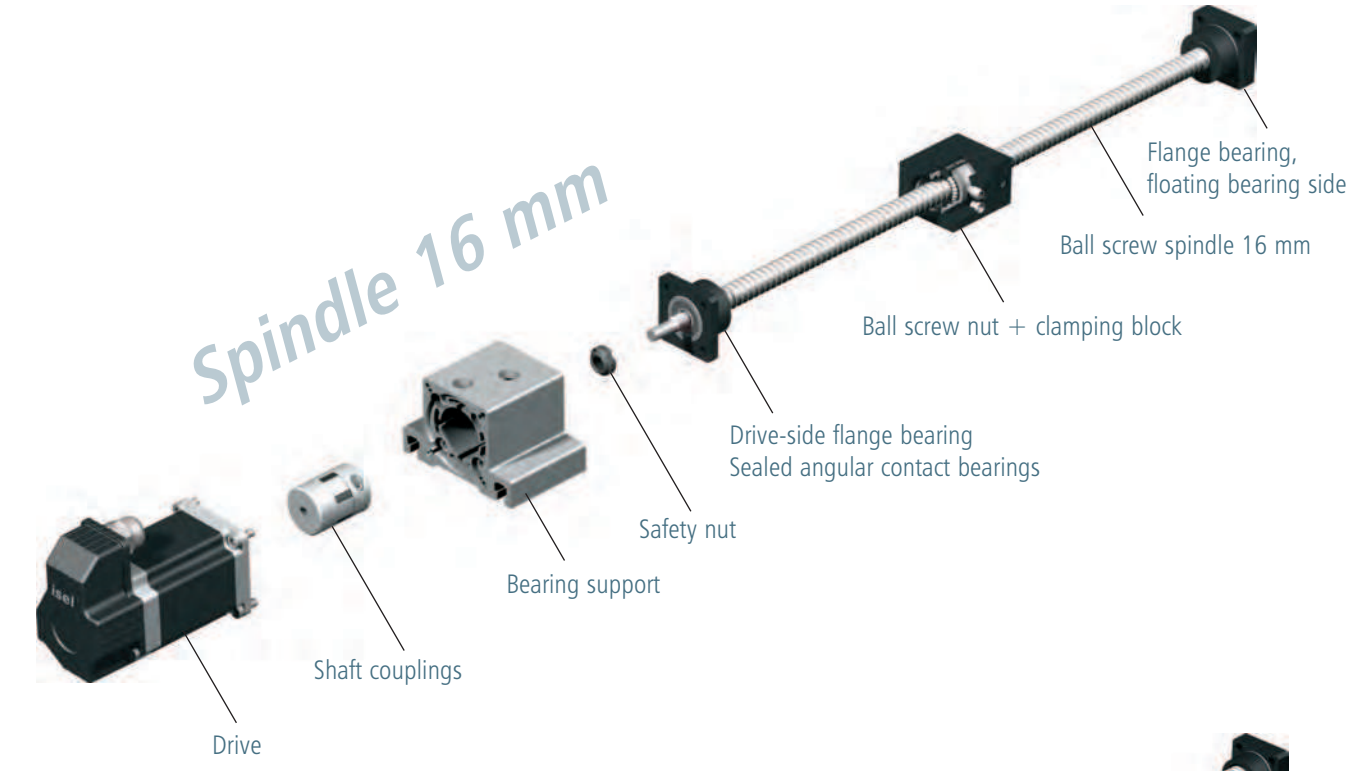


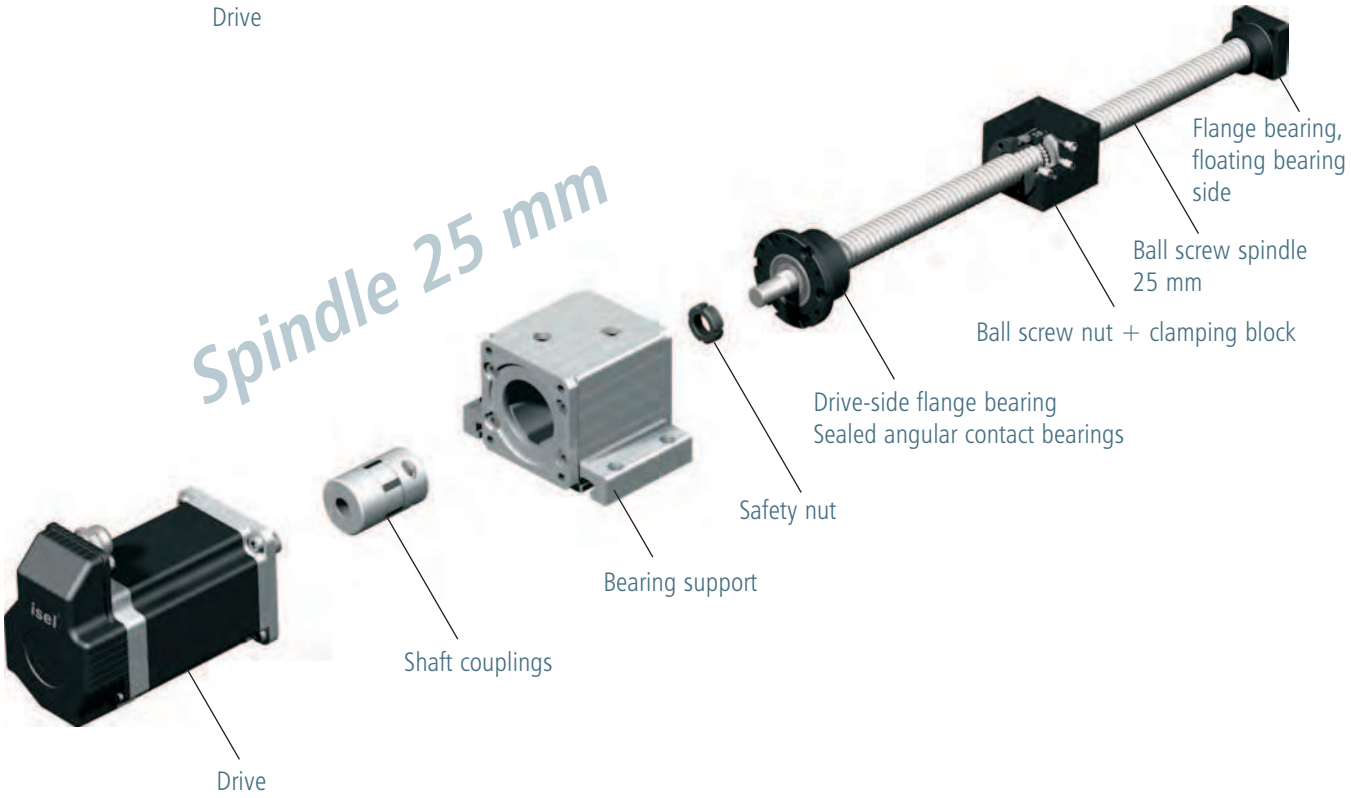

mechanics

# Recirculating ball spindles Ø 16, 25 mm

## Ø 16 features

- Ø16 mm, rolled, hardened and polished
- Material CF 53, inductively hardened (HRC 60 ± 2); (for detailed information see DIN 17212)
- Spindle pitches: 2.5 / 4 / 5 / 10 and 20 mm
- Lengths up to max. 3052 mm available
- End machining to isel standard or according to customer specification (see "Available lengths")
- Produced to DIN 69051, Part 3, Tolerance class 7

**Options**
- **End machining according to customer specification**
- **Available in other lengths**

## Available lengths

**Without end machining**
in 100 mm raster
- 352 to 3052 mm

**Two-sided end machining**
in 100 mm raster
- 368 mm to 3068 mm

Special length to dimensioned drawing: 211 13X XXXX

Special length to Drawing: 211 13X 0998

## Ordering key

**211 13X XXXX**

**Spindle pitch**
**2** = 2.5 mm
**3** = 4 mm
**4** = 5 mm
**5** = 10 mm
**6** = 20 mm

**End machining**
**0** = not machined
**5** = both-sided machining suitable for all feeds (aluminium profile length 78 mm)

**Lengths**
e.g. **045** = 452 mm
**086** = 868 mm
**305** = 3052 mm
(rounded to the final digit)

See "Available lengths" for permissible combinations.

## Ordering data

**Slotted nut**
- Self-locking
- M 10 × 0.75 mm

Part no.: **890257 0011**

## Dimensioned drawing

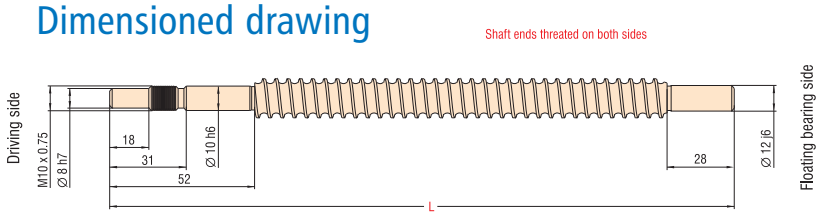


## Ø 25 features

- Ø 25 mm, hardened and polished
- Material CF 53, inductively hardened (HRC 60 ± 2); (for detailed information see DIN 17212)
- Spindle pitches: 5/10 and 20 mm
- Lengths up to max. 3000 mm available
- End machining to isel standard or according to customer specification (see "Available lengths")
- Produced in accordance with DIN 69051, Part 3, Tolerance class 7

**Option**
- **End machining to order**

## Available lengths

**Without end machining**
in 100 mm raster
- 500 to 3000 mm

Special length in accordance with drawing: 211 14X 0999

**Two-sided end machining**
in 100 mm raster
- 295 to 2995 mm

Special length in accordance with drawing: 21114X XXXX

## Ordering key

**211 14X XXXX**

**Spindle pitch**
**4** = 5 mm
**5** = 10 mm
**6** = 20 mm

**End machining**
**0** = not machined
**2** = both sides

**Lengths**
e.g. **050** = 500 mm
**100** = 1000 mm
**289** = 2895 mm
(rounded to the last digit)

See "Available lengths" for permissible combinations.

## Ordering data

**Slotted nut**
- Self-locking
- M 17 x 1.0 mm

Part no.: **890259 0011**

## dimensioned drawing

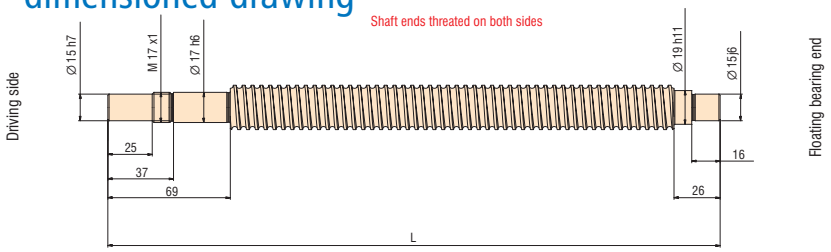

# Ball nuts

## Version 2–Ø16

### Features

- Material 16MnCr5 or 20MnCr5, pressed, hardened, polished
- Versions for recirculating ball spindle Ø16 mm
- Nut pitches: 2.5 / 4 / 5 / 10 mm
- Balls are rerouted internally
- As block housing with base fixing
- Regreasing through grease nipples 90°, 0°

### Load factors

| Pitch | Nominal Ø | dynamic load factor | static load factor |
|---|---|---|---|
| 2.5 mm | 16 mm | 3500 N | 5500 N |
| 4.0 mm | 16 mm | 4600 N | 7200 N |
| 5.0 mm | 16 mm | 4600 N | 7200 N |
| 10.0 mm | 16 mm | 4200 N | 6500 N |

### Ordering data

only for spindles Ø16

| Pitch | Part no. |
|---|---|
| 2.5 mm | 213 003 1003 |
| 4.0 mm | 213 003 1004 |
| 5.0 mm | 213 003 1005 |
| 10.0 mm | 213 003 1010 |

with matching:
dirt scraper
- VE 2 unit Part no.: 213500 0001

### Dimensioned drawings

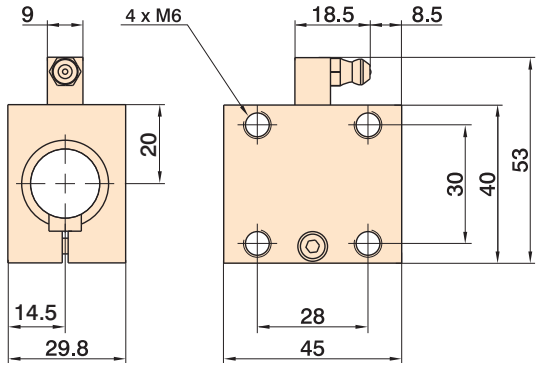


## Version 3–Ø16 Ø25

### Features

- Material 16MnCr5, ground
- Versions for recirculating ball spindles Ø16 and Ø25 mm
- Nut pitches: 2.5 / 4 / 5 / 10 mm 20 mm (Ø 16 mm), 5/10 and 20 mm (Ø25 mm)
- Balls are rerouted internally
- The version with nut pitch 20 mm is supplied with scrapers

### Load factors

| Pitch (mm) | Nominal Ø (mm) | Dyn. load factor (N) | Static load factor (N) |
|---|---|---|---|
| 2.5 | 16 | 3500 | 5500 |
| 4.0 | 16 | 4600 | 7200 |
| 5.0 | 16 | 4600 | 7200 |
| 10.0 | 16 | 4200 | 6500 |
| 5.0 | 25 | 5100 | 12600 |
| 10.0 | 25 | 5100 | 12600 |
| 20 | 25 | 3570 | 8800 |

### Ordering data

only for spindles Ø25

| Pitch | Part no. |
|---|---|
| 5.0 mm | 213 700 0005 |
| 10.0 mm | 213 700 0010 |
| 20.0 mm | 213 700 0020 |

with matching:
dirt scraper
- VE 2 unit

Part no.: 213700 9000

only for spindles Ø16

| Pitch | Part no. |
|---|---|
| 2.5 mm | 213 503 |
| 4.0 mm | 213 514 |
| 5.0 mm | 213 505 |
| 10.0 mm | 213 510 |
| 20.0 mm | 213 520 |

with matching:
dirt scraper
- VE 2 unit

Part no.: 213500 0001

### Dimensioned drawings

for spindle Ø 16

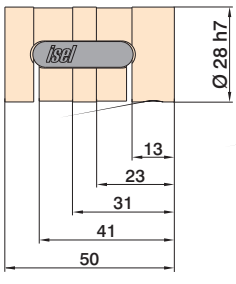


for spindle Ø 25

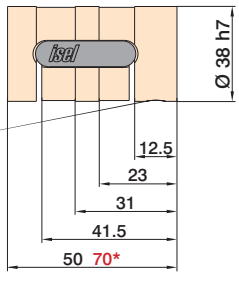


*) At pitch = 20

# Clamping blocks for nut version 3

Flange securing

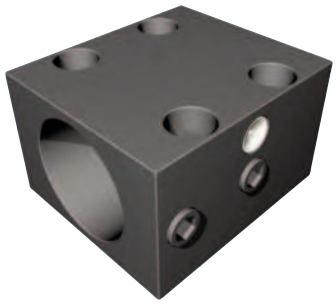

Base securing

## Features

- Material steel, gunmetal finish
- Versions for recirculating ball spindles Ø 25 and Ø 16 mm
- Nut pitches
  5/10 and 20 mm (Ø 25 mm)
  2.5/4/5/10 and 20 mm (Ø 16 mm)
- Recirculating ball nuts are adjustable for no-play
- Clamping blocks for base and flange securing

## Ordering data

### Clamping block 2 Ø16
Flange securing

| Pitch | Part no. |
|---|---|
| all | 213 501 |

### Clamping block 1 Ø16
Base securing

| Pitch | Part no. |
|---|---|
| all | 213 500 |

### Clamping block 2 Ø25
Flange securing

| Pitch | Part no. |
|---|---|
| 5 / 10 | 213 700 9003 |
| 20 | 213 700 9004 |

### Clamping block 1 Ø25
Base securing

| Pitch | Part no. |
|---|---|
| 5 / 10 | 213 700 9001 |
| 20 | 213 700 9002 |

## Dimensioned drawings - spindle clamping blocks Ø 16

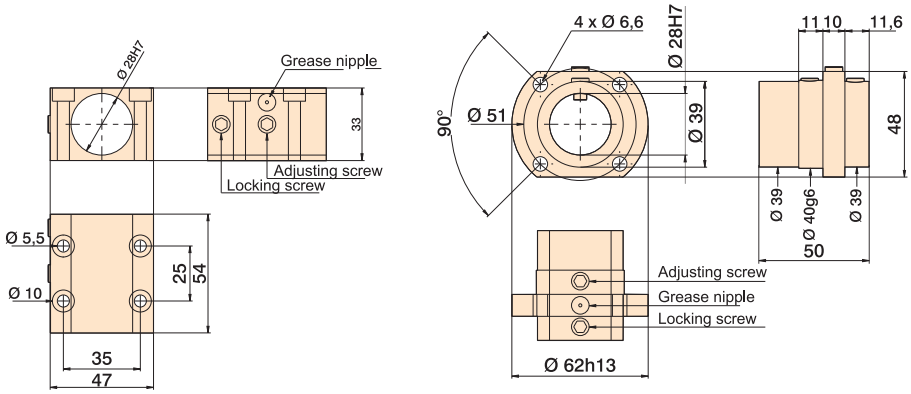


## Dimensioned drawings - spindle clamping blocks Ø 25

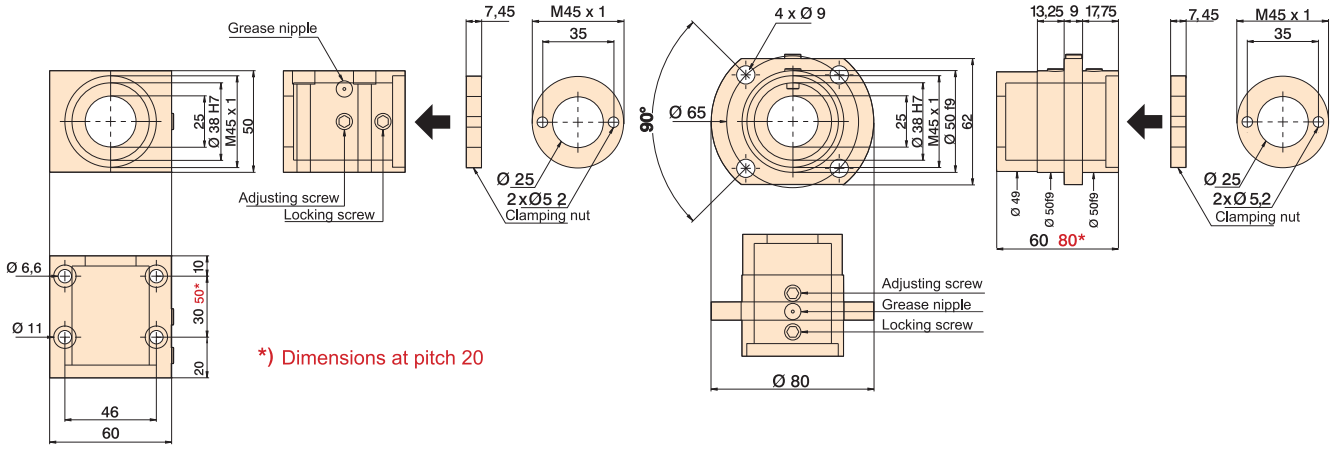

# Flange bearing

## for spindle ∅ 16 mm

Flange bearing
drive side

Flange bearing
floating bearing side

### Ordering data

Flange bearing, drive side

Part no.: 216 504 0001

Flange bearing, floating bearing side

Part no.: 216 504 0002

### Features

- Bearing, spindle drive side (fixed bearing side) and the spindle floating bearing side
- Flange bearing, drive side: bushing with two pressed angular contact ball bearings in an O-configuration
- Flange bearing, floating bearing side (counter-bearing): bushing with pressed needle bearing

### Dimensioned drawings

Flange bearing
drive side

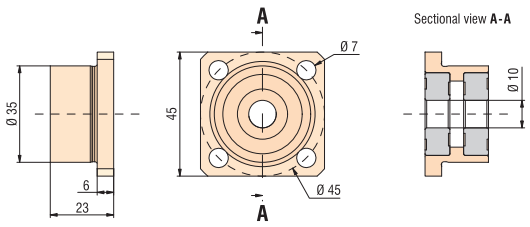


Flange bearing
floating bearing side

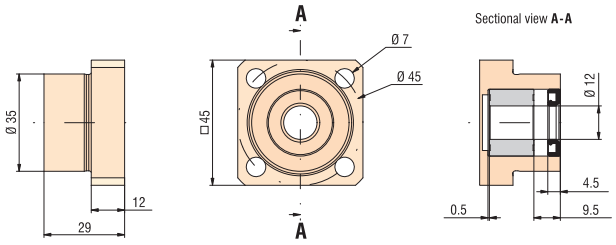


## for spindle ∅ 25 mm

Flange bearing
drive side

Flange bearing
floating bearing side

### Ordering data

Flange bearing, drive side

Part no.: 216 504 0006

Flange bearing, floating bearing side

Part no.: 216 504 0005

### Features

- Bearing, spindle drive side (fixed bearing side) and the spindle floating bearing side
- Flange bearing, drive side: bushing with two pressed angular contact ball bearings in an O-configuration
- Flange bearing, floating bearing side (counter-bearing): bushing with pressed needle bearing

### Dimensioned drawings

Flange bearing
drive side

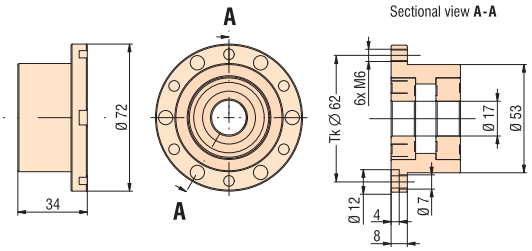


Flange bearing
floating bearing side

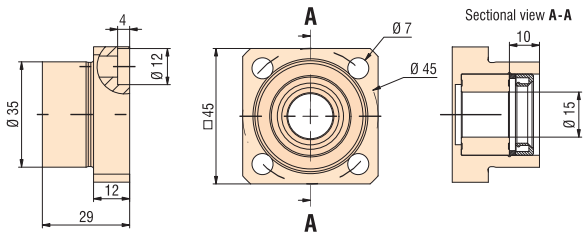

# Bearing supports

## Bearing support 1

- Aluminium profile compliant with DIN EN 12020-2
- As a parallel connection between the flange bearing and motor flange
- Flat milled securing surfaces
- Version for recirculating ball spindle Ø 16 mm
- Universal securing options

Part no.: **216504 0007**

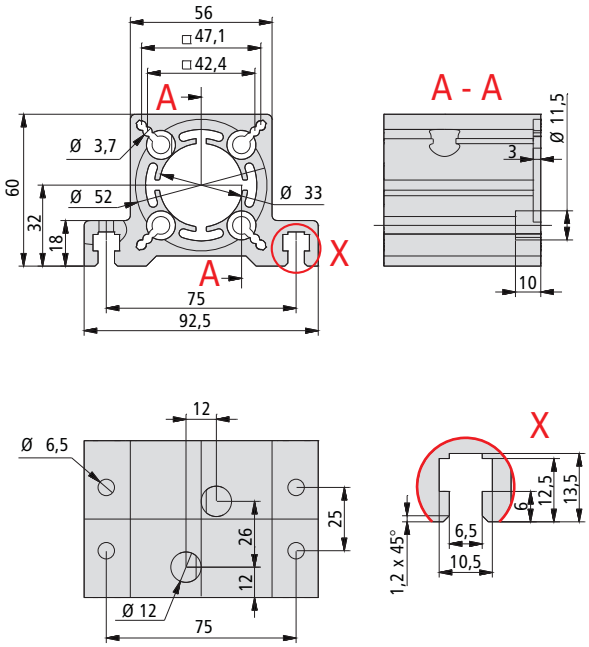


## Bearing support 2

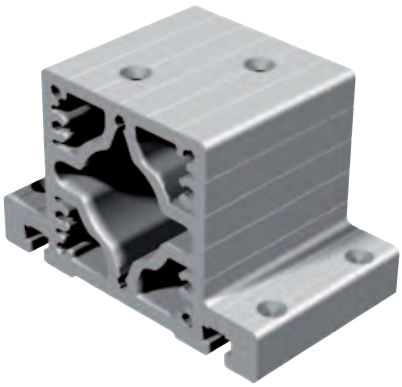

- Aluminium profile compliant with DIN EN 12020-2
- As a parallel connection between the flange bearing and motor flange
- Version for recirculating ball spindle Ø 25 mm
- Universal securing options

Part no.: **216504 0008**

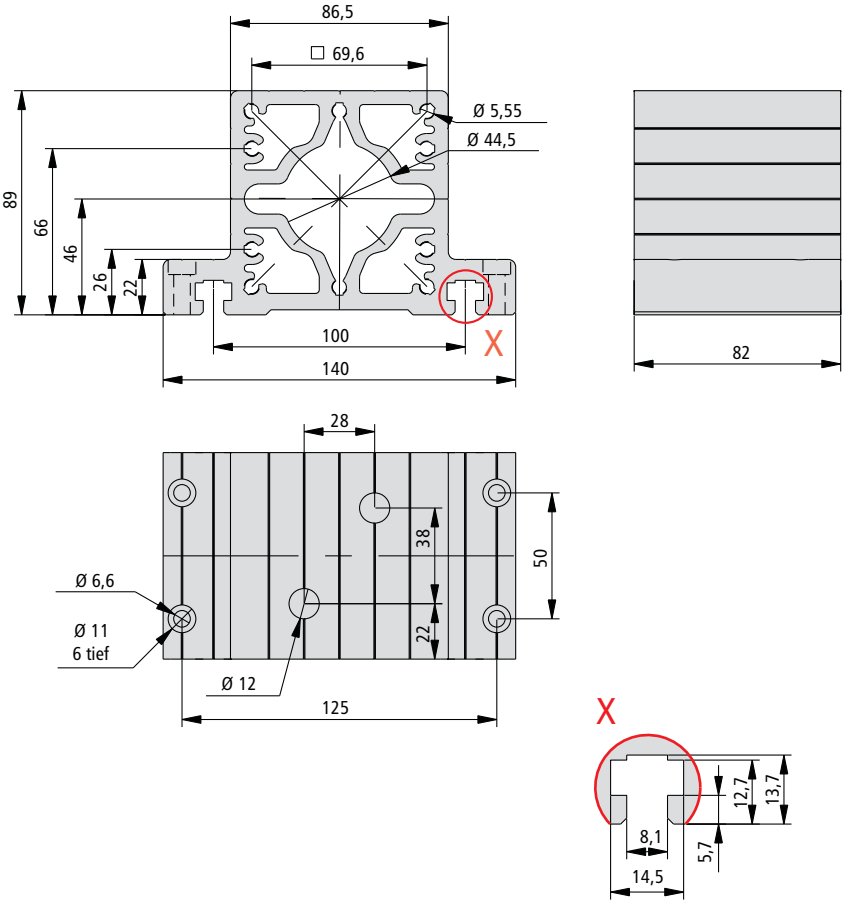

Space for your notes